# Leica iCON iCR80

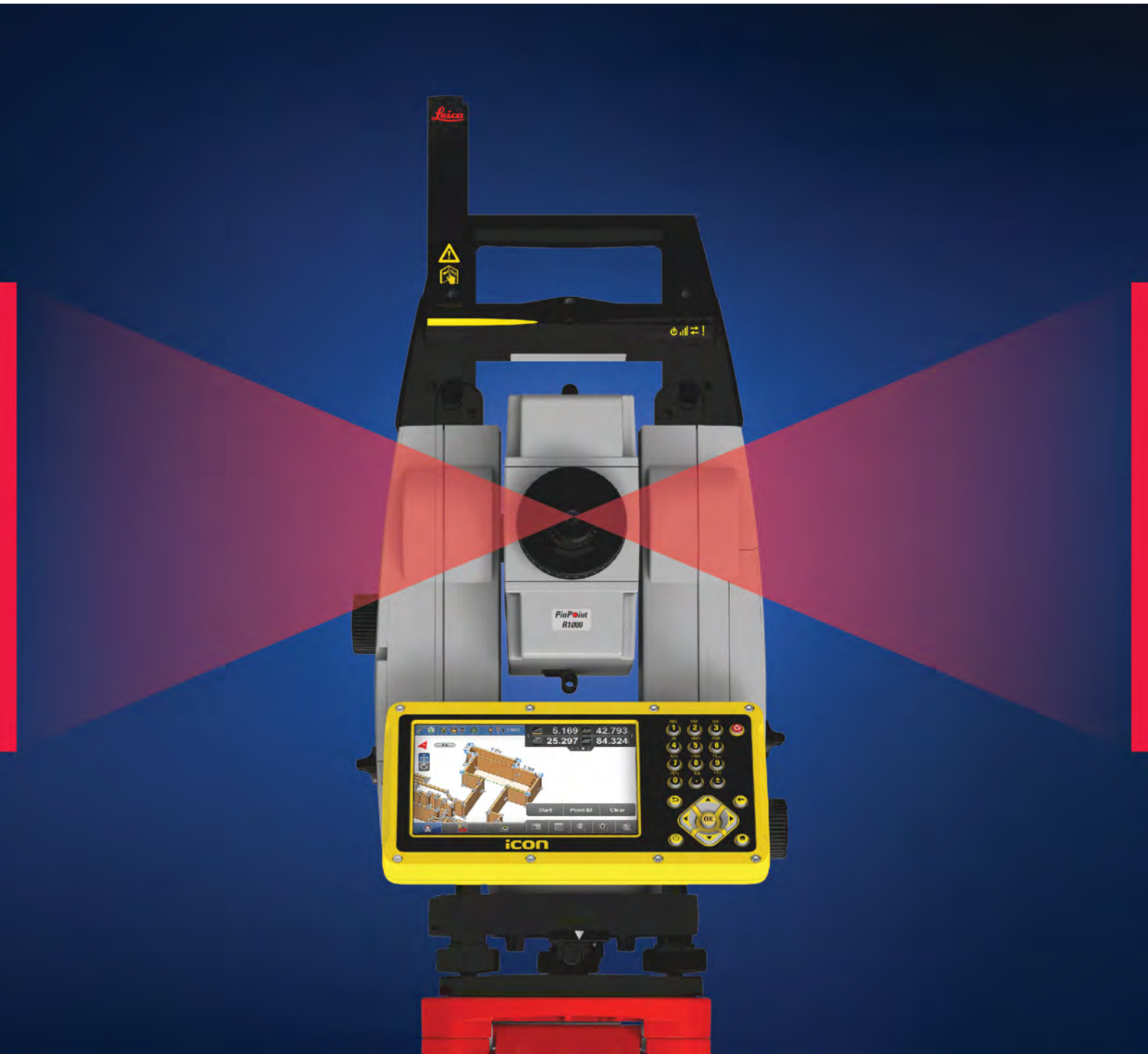


User Manual
**Version 2.0**
**English**

- when it has to be **right**

Leica Geosystems

# Introduction

**Purchase**

Congratulations on the purchase of the Leica iCON iCR80.

This manual contains important safety directions as well as instructions for setting up the product and operating it. Refer to "1 Safety Directions" for further information.

Read carefully through the User Manual before you switch on the product.

☞

The content of this document is subject to change without prior notice. Ensure that the product is used in accordance with the latest version of this document.

Updated versions are available for download at the following Internet address:

**https://myworld.leica-geosystems.com** > **myDownloads**.

**Product identification**

The model and serial number of your product are indicated on the type plate.

Always refer to this information when you need to contact your agency or Leica Geosystems authorised service centre.

**Trademarks**

- Windows is a registered trademark of Microsoft Corporation in the United States and other countries
- *Bluetooth*® is a registered trademark of Bluetooth SIG, Inc.
- SD Logo is a trademark of SD-3C, LLC.

All other trademarks are the property of their respective owners.

**Validity of this manual**

This manual applies to the Leica iCON iCR80.

**Available documentation**

| Name | Description/Format | | PDF |
|---|---|---|---|
| iCR70/iCR80 Quick Guide | Provides an overview of the product together with technical data and safety directions. Intended as a quick reference guide. | ✓ | ✓ |
| iCR80 User Manual | All instructions required in order to operate the product to a basic level are contained in the User Manual. Provides an overview of the product together with technical data and safety directions. | - | ✓ |
| iCON build How-To Guide, iCON site How-To Guide | Overall comprehensive guide to the product and application functions. Included are detailed descriptions of special software/hardware settings and software/hardware functions intended for technical specialists. | - | ✓ |

**Refer to the following resources for all iCR80 documentation/software:**

- the supplied data storage device
- https://myworld.leica-geosystems.com

**Leica Geosystems address book**

On the last page of this manual, you can find the address of Leica Geosystems headquarters. For a list of regional contacts, please visit **http://leica-geosystems.com/contact-us/sales_support**.

myWorld@Leica Geosystems (**https://myworld.leica-geosystems.com**) offers a wide range of services, information and training material.

With direct access to myWorld, you are able to access all relevant services whenever it is convenient for you.

| Service | Description |
|---|---|
| myProducts | Add all products that you and your company own and explore your world of Leica Geosystems: View detailed information on your products and update your products with the latest software and keep up-to-date with the latest documentation. |
| myService | View the current service status and full service history of your products in Leica Geosystems service centres. Access detailed information on the services performed and download your latest calibration certificates and service reports. |
| mySupport | Create new support requests for your products that will be answered by your local Leica Geosystems Support Team. View the complete history of your support requests and view detailed information on each request in case you want to refer to previous support requests. |
| myTraining | Enhance your product knowledge with Leica Geosystems Campus - Information, Knowledge, Training. Study the latest online training material on your products and register for seminars or courses in your country. |
| myTrustedServices | Add your subscriptions and manage users for Leica Geosystems Trusted Services, the secure software services, that assist you to optimise your workflow and increase your efficiency. |

# Table of Contents

# 1 Safety Directions

## 1.1 General Introduction

**Description**

The following directions enable the person responsible for the product, and the person who actually uses the equipment, to anticipate and avoid operational hazards.

The person responsible for the product must ensure that all users understand these directions and adhere to them.

**About warning messages**

Warning messages are an essential part of the safety concept of the instrument. They appear wherever hazards or hazardous situations can occur.

**Warning messages...**

- make the user alert about direct and indirect hazards concerning the use of the product.
- contain general rules of behaviour.

For the users' safety, all safety instructions and safety messages shall be strictly observed and followed! Therefore, the manual must always be available to all persons performing any tasks described here.

**DANGER**, **WARNING**, **CAUTION** and **NOTICE** are standardised signal words for identifying levels of hazards and risks related to personal injury and property damage. For your safety, it is important to read and fully understand the following table with the different signal words and their definitions! Supplementary safety information symbols may be placed within a warning message as well as supplementary text.

| Type | Description |
|---|---|
| ⚠ **DANGER** | Indicates an imminently hazardous situation which, if not avoided, will result in death or serious injury. |
| ⚠ **WARNING** | Indicates a potentially hazardous situation or an unintended use which, if not avoided, could result in death or serious injury. |
| ⚠ **CAUTION** | Indicates a potentially hazardous situation or an unintended use which, if not avoided, may result in minor or moderate injury. |
| ***NOTICE*** | Indicates a potentially hazardous situation or an unintended use which, if not avoided, may result in appreciable material, financial and environmental damage. |
| ☞ | Important paragraphs which must be adhered to in practice as they enable the product to be used in a technically correct and efficient manner. |

## 1.2 Definition of Use

**Intended use**

- Measuring horizontal and vertical angles
- Measuring distances
- Recording measurements
- Automatic target search, recognition and tracking
- Visualising the aiming direction and vertical axis
- Remote control of product
- Data communication with external appliances
- Computing with software

**Reasonably foreseeable misuse**

- Use of the product without instruction.
- Use outside of the intended use and limits.
- Disabling safety systems.
- Removal of hazard notices.
- Opening the product using tools, for example screwdriver, unless this is permitted for certain functions.
- Modification or conversion of the product.
- Use after misappropriation.
- Use of products with recognisable damage or defects.
- Use with accessories from other manufacturers without the prior explicit approval of Leica Geosystems.
- Inadequate safeguards at the working site.
- Aiming directly into the sun.

## 1.3 Limits of Use

**Environment**

Suitable for use in an atmosphere appropriate for permanent human habitation: not suitable for use in aggressive or explosive environments.

**⚠WARNING**

**Working in hazardous areas, or close to electrical installations or similar situations**

Life Risk.

**Precautions:**

- Local safety authorities and safety experts must be contacted by the person responsible for the product before working in such conditions.

## 1.4 Responsibilities

**Manufacturer of the product**

Leica Geosystems AG, CH-9435 Heerbrugg, hereinafter referred to as Leica Geosystems, is responsible for supplying the product, including the User Manual and original accessories, in a safe condition.

**Person responsible for the product**

The person responsible for the product has the following duties:

- To understand the safety instructions on the product and the instructions in the User Manual.
- To ensure that it is used in accordance with the instructions.
- To be familiar with local regulations relating to safety and accident prevention.
- To inform Leica Geosystems immediately if the product and the application becomes unsafe.
- To ensure that the national laws, regulations and conditions for the operation of the product are respected.

## 1.5 Hazards of Use

***NOTICE***

**Dropping, misusing, modifying, storing the product for long periods or transporting the product**

Watch out for erroneous measurement results.

**Precautions:**

- Periodically carry out test measurements and perform the field adjustments indicated in the User Manual, particularly after the product has been subjected to abnormal use as well as before and after important measurements.

**DANGER**

**Risk of electrocution**

Because of the risk of electrocution, it is dangerous to use poles, levelling staffs and extensions in the vicinity of electrical installations such as power cables or electrical railways.

**Precautions:**

- Keep at a safe distance from electrical installations. If it is essential to work in this environment, first contact the safety authorities responsible for the electrical installations and follow their instructions.

***NOTICE***

**Remote control of product**

With the remote control of products, it is possible that extraneous targets will be picked out and measured.

**Precautions:**

- When measuring in remote control mode, always check your results for plausibility.

**⚠WARNING**

**Lightning strike**

If the product is used with accessories, for example masts, staffs, poles, you may increase the risk of being struck by lightning.

**Precautions:**

- Do not use the product in a thunderstorm.

---

**⚠WARNING**

**Distraction/loss of attention**

During dynamic applications, for example stakeout procedures, there is a danger of accidents occurring if the user does not pay attention to the environmental conditions around, for example obstacles, excavations or traffic.

**Precautions:**

- The person responsible for the product must make all users fully aware of the existing dangers.

---

**⚠WARNING**

**Inadequate securing of the working site**

This can lead to dangerous situations, for example in traffic, on building sites and at industrial installations.

**Precautions:**

- Always ensure that the working site is adequately secured.
- Adhere to the regulations governing safety, accident prevention and road traffic.

---

**⚠CAUTION**

**Pointing product toward the sun**

Be careful when pointing the product toward the sun, because the telescope functions as a magnifying glass and can injure your eyes and/or cause damage inside the product.

**Precautions:**

- Do not point the product directly at the sun.

---

**⚠CAUTION**

**Not properly secured accessories**

If the accessories used with the product are not properly secured and the product is subjected to mechanical shock, for example blows or falling, the product may be damaged or people can sustain injury.

**Precautions:**

- When setting up the product, make sure that the accessories are correctly adapted, fitted, secured, and locked in position.
- Avoid subjecting the product to mechanical stress.

---

**⚠WARNING**

**Inappropriate mechanical influences to batteries**

During the transport, shipping or disposal of batteries it is possible for inappropriate mechanical influences to constitute a fire hazard.

**Precautions:**

- Before shipping the product or disposing it, discharge the batteries by the product until they are flat.
- When transporting or shipping batteries, the person in charge of the product must ensure that the applicable national and international rules and regulations are observed.
- Before transportation or shipping, contact your local passenger or freight transport company.

---

**⚠WARNING**

**Exposure of batteries to high mechanical stress, high ambient temperatures or immersion into fluids**

This can cause leakage, fire or explosion of the batteries.

**Precautions:**

- Protect the batteries from mechanical influences and high ambient temperatures. Do not drop or immerse batteries into fluids.

---

**⚠WARNING**

**Short circuit of battery terminals**

If battery terminals are short circuited e.g. by coming in contact with jewellery, keys, metallised paper or other metals, the battery can overheat and cause injury or fire, for example by storing or transporting in pockets.

**Precautions:**

- Make sure that the battery terminals do not come into contact with metallic objects.

---

**⚠WARNING**

**Improper disposal**

If the product is improperly disposed of, the following can happen:

- If polymer parts are burnt, poisonous gases are produced which may impair health.
- If batteries are damaged or are heated strongly, they can explode and cause poisoning, burning, corrosion or environmental contamination.
- By disposing of the product irresponsibly you may enable unauthorised persons to use it in contravention of the regulations, exposing themselves and third parties to the risk of severe injury and rendering the environment liable to contamination.

**Precautions:**

▸ 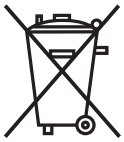

The product must not be disposed with household waste. Dispose of the product appropriately in accordance with the national regulations in force in your country. Always prevent access to the product by unauthorised personnel.

Product-specific treatment and waste management information can be received from your Leica Geosystems distributor.

**⚠WARNING**

**Improperly repaired equipment**

Risk of injuries to users and equipment destruction due to lack of repair knowledge.

**Precautions:**

▸ Only authorised Leica Geosystems Service Centres are entitled to repair these products.

## 1.6 Laser Classification

### 1.6.1 General

**General**

The following chapters provide instructions and training information about laser safety according to international standard IEC 60825-1 (2014-05) and technical report IEC TR 60825-14 (2004-02). The information enables the person responsible for the product and the person who actually uses the equipment, to anticipate and avoid operational hazards.

☞ According to IEC TR 60825-14 (2004-02), products classified as laser class 1, class 2 and class 3R do not require:

- laser safety officer involvement,
- protective clothes and eyewear,
- special warning signs in the laser working area

if used and operated as defined in this User Manual due to the low eye hazard level.

☞ National laws and local regulations could impose more stringent instructions for the safe use of lasers than IEC 60825-1 (2014-05) and IEC TR 60825-14 (2004-02).

## 1.6.2 Distancer, Measurements with Reflectors

**General**

The EDM module built into the product produces a visible laser beam which emerges from the telescope objective.

The laser product described in this section is classified as laser class 1 in accordance with:

- IEC 60825-1 (2014-05): “Safety of laser products”

These products are safe under reasonably foreseeable conditions of operation and are not harmful to the eyes provided that the products are used and maintained in accordance with this User Manual.

| Description | Value |
|---|---|
| Wavelength | 658 nm |
| Pulse duration | 800 ps |
| Pulse repetition frequency (PRF) | 100 MHz |
| Maximum average radiant power | 0.33 mW |
| Beam divergance | 1.5 mrad × 3 mrad |

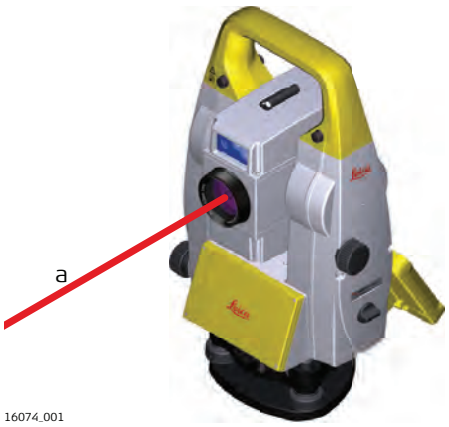


a Laser beam

## 1.6.3 Distancer, Measurements without Reflectors

**General**

The EDM module built into the product produces a visible laser beam which emerges from the telescope objective.

The laser product described in this section is classified as laser class 3R in accordance with:

- IEC 60825-1 (2014-05): “Safety of laser products”

Direct intrabeam viewing may be hazardous (low eye hazard level), in particular for deliberate ocular exposure. The beam may cause dazzle, flash-blindness and after-images, particularly under low ambient light conditions. The risk of injury for laser class 3R products is limited because of:

a) unintentional exposure would rarely reflect worst case conditions of (e.g.) beam alignment with the pupil, worst case accommodation,
b) inherent safety margin in the maximum permissible exposure to laser radiation (MPE)
c) natural aversion behaviour for exposure to bright light for the case of visible radiation.

| Description | Value (R30/R1000) |
|---|---|
| Wavelength | 658 nm |
| Maximum average radiant power | 4.8 mW |
| Pulse duration | 800 ps |
| Pulse repetition frequency (PRF) | 100 MHz |
| Beam divergence | 0.2 mrad × 0.3 mrad |
| NOHD (Nominal Ocular Hazard Distance) @ 0.25 s | 44 m/144 ft |

**⚠CAUTION**

**Class 3R laser products**

From a safety perspective, class 3R laser products should be treated as potentially hazardous.

**Precautions:**

- Prevent direct eye exposure to the beam.
- Do not direct the beam at other people.

**⚠CAUTION**

**Reflected beams aimed at reflecting surfaces**

Potential hazards are not only related to direct beams but also to reflected beams aimed at reflecting surfaces such as prisms, windows, mirrors, metallic surfaces, etc.

**Precautions:**

- Do not aim at areas that are essentially reflective, such as a mirror, or which could emit unwanted reflections.
- Do not look through or beside the optical sight at prisms or reflecting objects when the laser is switched on, in laser pointer or distance measurement mode. Aiming at prisms is only permitted when looking through the telescope.

**Labelling**


## 1.6.4 Red Laser Pointer

**General**

The laser pointer built into the product produces a visible red laser beam which emerges from the telescope objective.

The laser product described in this section is classified as laser class 3R in accordance with:

- IEC 60825-1 (2014-05): “Safety of laser products”

Direct intrabeam viewing may be hazardous (low eye hazard level), in particular for deliberate ocular exposure. The beam may cause dazzle, flash-blindness and after-images, particularly under low ambient light conditions. The risk of injury for laser class 3R products is limited because of:

a) unintentional exposure would rarely reflect worst case conditions of (e.g.) beam alignment with the pupil, worst case accommodation,
b) inherent safety margin in the maximum permissible exposure to laser radiation (MPE)
c) natural aversion behaviour for exposure to bright light for the case of visible radiation.

| Description | Value (R30/R1000) |
|---|---|
| Wavelength | 658 nm |
| Maximum average radiant power | 4.8 mW |
| Pulse duration | 800 ps |
| Pulse repetition frequency (PRF) | 100 MHz |
| Beam divergence | 0.2 mrad × 0.3 mrad |
| NOHD (Nominal Ocular Hazard Distance) @ 0.25 s | 44 m/144 ft |

**⚠CAUTION**

**Class 3R laser products**

From a safety perspective, class 3R laser products should be treated as potentially hazardous.

**Precautions:**

- Prevent direct eye exposure to the beam.
- Do not direct the beam at other people.

---

**⚠CAUTION**

**Reflected beams aimed at reflecting surfaces**

Potential hazards are not only related to direct beams but also to reflected beams aimed at reflecting surfaces such as prisms, windows, mirrors, metallic surfaces, etc.

**Precautions:**

- Do not aim at areas that are essentially reflective, such as a mirror, or which could emit unwanted reflections.
- Do not look through or beside the optical sight at prisms or reflecting objects when the laser is switched on, in laser pointer or distance measurement mode. Aiming at prisms is only permitted when looking through the telescope.

---

## Labelling


16098_001


16160_002

---

## 1.6.5 Automatic Target Aiming (ATRplus)

**General**

The Automatic Target Aiming built into the product produces an invisible laser beam which emerges from the telescope objective.

The laser product described in this section is classified as laser class 1 in accordance with:

- IEC 60825-1 (2014-05): "Safety of laser products"

These products are safe under reasonably foreseeable conditions of operation and are not harmful to the eyes provided that the products are used and maintained in accordance with this User Manual.

| Description | Value |
|---|---|
| Wavelength | 785 nm |
| Maximum radiant peak power per pulse | 10 mW |
| Pulse duration | ≤ 15 ms |
| Pulse repetition frequency (PRF) | ≤ 213 Hz |
| Beam divergence | 25 mrad |

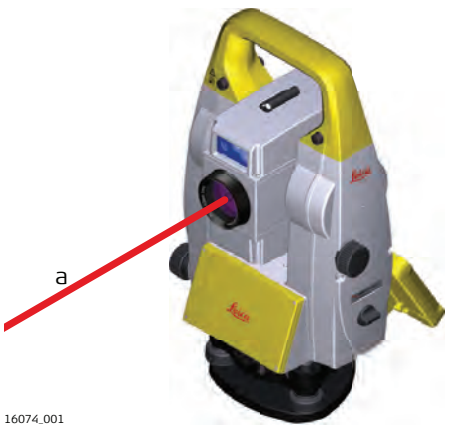


a Laser beam

## 1.6.6 PowerSearch (PS)

**General**

The PowerSearch built into the product produces an invisible laser beam which emerges from the front side of the telescope.

The laser product described in this section is classified as laser class 1 in accordance with:

- IEC 60825-1 (2014-05): "Safety of laser products"

These products are safe under reasonably foreseeable conditions of operation and are not harmful to the eyes provided that the products are used and maintained in accordance with this User Manual.

| Description | Value |
|---|---|
| Wavelength | 850 nm |
| Maximum average radiant power | 11 mW |
| Pulse duration | 20 ns, 40 ns |
| Pulse repetition frequency (PRF) | 24.4 kHz |

| Description | Value |
|---|---|
| Beam divergence | 0.4 mrad × 700 mrad |

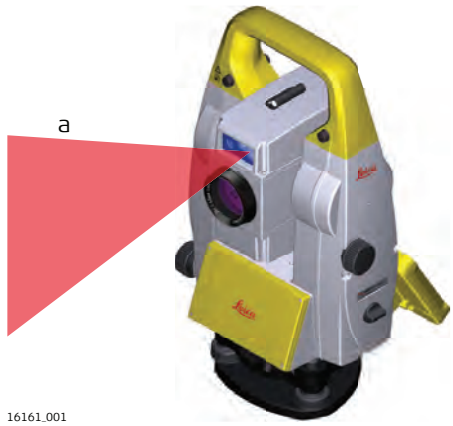


a Laser beam

## 1.6.7 Electronic Guide Light (EGL)

**General**

The Electronic Guide Light built into the product produces a visible LED beam which emerges from the front side of the telescope.

☞ The product described in this section, is excluded from the scope of IEC 60825-1 (2014-05): “Safety of laser products”.
The product described in this section, is classified as exempt group in accordance with IEC 62471 (2006-07) and does not pose any hazard provided that the product is used and maintained in accordance with this user manual.

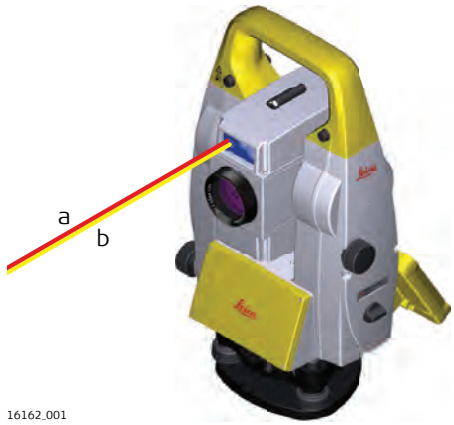


a LED beam red
b LED beam yellow

## 1.6.8 Laser Plummet

**General**

The laser plummet built into the product produces a visible red laser beam which emerges from the bottom of the product.

The laser product described in this section is classified as laser class 2 in accordance with:

- IEC 60825-1 (2014-05): “Safety of laser products”

These products are safe for momentary exposures but can be hazardous for deliberate staring into the beam. The beam may cause dazzle, flash-blindness and after-images, particularly under low ambient light conditions.

| Description | Value |
|---|---|
| Wavelength | 640 nm |
| Maximum average radiant power | 0.95 mW |
| Pulse duration– cw (continuous wave) | 10 ms |
| Pulse repetition frequency (PRF) | 1 kHz |
| Beam divergence | <1.5 mrad |

**⚠CAUTION**

**Class 2 laser product**

From a safety perspective, class 2 laser products are not inherently safe for the eyes.

**Precautions:**

- Avoid staring into the beam or viewing it through optical instruments.
- Avoid pointing the beam at other people or at animals.

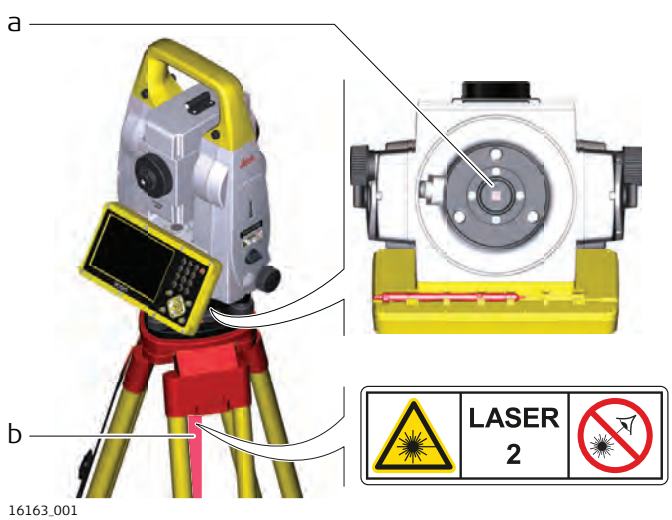


a Exit for laser beam
b Laser beam

## 1.7 Electromagnetic Compatibility (EMC)

**Description**

The term Electromagnetic Compatibility is taken to mean the capability of the product to function smoothly in an environment where electromagnetic radiation and electrostatic discharges are present, and without causing electromagnetic disturbances to other equipment.

**⚠WARNING**

**Electromagnetic radiation**

Electromagnetic radiation can cause disturbances in other equipment.

**Precautions:**

- Although the product meets the strict regulations and standards which are in force in this respect, Leica Geosystems cannot completely exclude the possibility that other equipment may be disturbed.

---

**⚠CAUTION**

**Use of the product with accessories from other manufacturers. For example field computers, personal computers or other electronic equipment, non-standard cables or external batteries**

This may cause disturbances in other equipment.

**Precautions:**

- Use only the equipment and accessories recommended by Leica Geosystems.
- When combined with the product, they meet the strict requirements stipulated by the guidelines and standards.
- When using computers, two-way radios or other electronic equipment, pay attention to the information about electromagnetic compatibility provided by the manufacturer.

---

**⚠CAUTION**

**Intense electromagnetic radiation. For example, near radio transmitters, transponders, two-way radios or diesel generators**

Although the product meets the strict regulations and standards which are in force in this respect, Leica Geosystems cannot completely exclude the possibility that function of the product may be disturbed in such an electromagnetic environment.

**Precautions:**

- Check the plausibility of results obtained under these conditions.

---

**⚠CAUTION**

**Electromagnetic radiation due to improper connection of cables**

If the product is operated with connecting cables attached at only one of their two ends, for example external supply cables, interface cables, the permitted level of electromagnetic radiation may be exceeded and the correct functioning of other products may be impaired.

**Precautions:**

- While the product is in use, connecting cables, for example product to external battery, product to computer, must be connected at both ends.

---

**⚠WARNING**

**Use of product with radio or digital cellular phone devices**

Electromagnetic fields can cause disturbances in other equipment, in installations, in medical devices, for example pacemakers or hearing aids and in aircrafts. Electromagnetic fields can also affect humans and animals.

**Precautions:**

- Although the product meets the strict regulations and standards which are in force in this respect, Leica cannot completely exclude the possibility that other equipment can be disturbed or that humans or animals can be affected.
- Do not operate the product with radio or digital cellular phone devices in the vicinity of filling stations or chemical installations, or in other areas where an explosion hazard exists.
- Do not operate the product with radio or digital cellular phone devices near to medical equipment.
- Do not operate the product with radio or digital cellular phone devices in aircrafts.
- Do not operate the product with radio or digital cellular phone devices for long periods with the product immediately next to your body.

## 1.8 FCC Statement, Applicable in U.S.

☞ The greyed paragraph below is only applicable for products without radio.

**⚠WARNING**

This equipment has been tested and found to comply with the limits for a Class B digital device, pursuant to part 15 of the FCC rules.

These limits are designed to provide reasonable protection against harmful interference in a residential installation.

This equipment generates, uses and can radiate radio frequency energy and, if not installed and used in accordance with the instructions, may cause harmful interference to radio communications. However, there is no guarantee that interference will not occur in a particular installation.

If this equipment does cause harmful interference to radio or television reception, which can be determined by turning the equipment off and on, the user is encouraged to try to correct the interference by one or more of the following measures:

- Reorient or relocate the receiving antenna.
- Increase the separation between the equipment and the receiver.
- Connect the equipment into an outlet on a circuit different from that to which the receiver is connected.
- Consult the dealer or an experienced radio/TV technician for help.

**⚠CAUTION**

Changes or modifications not expressly approved by Leica Geosystems for compliance could void the user's authority to operate the equipment.

## Labelling iCR80


## Labelling internal battery GEB222

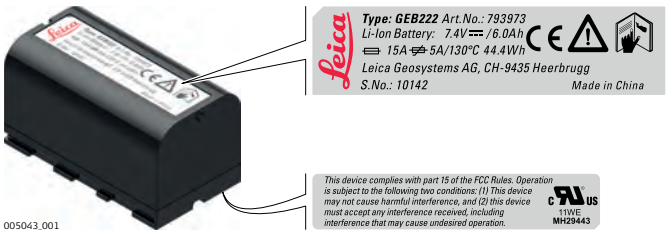


## Labelling Communication-Handle

### CCD6

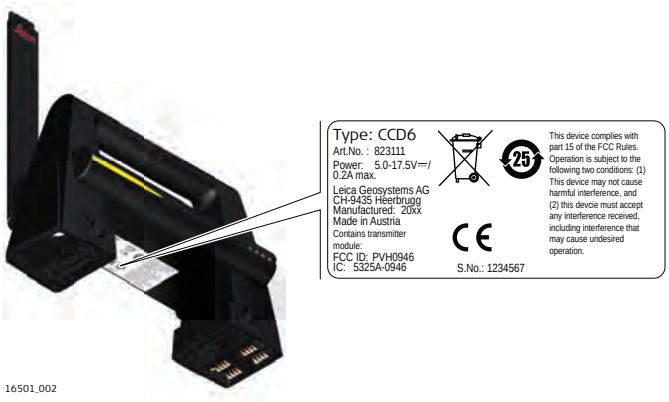

## 1.9 ISED Statements (EN/FR), Applicable in Canada

**⚠WARNING**

This Class (B) digital apparatus complies with Canadian ICES-003.
Cet appareil numérique de la classe (B) est conforme à la norme NMB-003 du Canada.

**Canada Compliance Statement**

This device contains licence-exempt transmitter(s)/receiver(s) that comply with Innovation, Science and Economic Development Canada's licence-exempt RSS(s). Operation is subject to the following two conditions:

1. This device may not cause interference.
2. This device must accept any interference, including interference that may cause undesired operation of the device.

**Canada Déclaration de Conformité**

L'émetteur/récepteur exempt de licence contenu dans le présent appareil est conforme aux CNR d'Innovation, Sciences et Développement économique Canada applicables aux appareils radio exempts de licence. L'exploitation est autorisée aux deux conditions suivantes:

1. L'appareil ne doit pas produire de brouillage;
2. L'appareil doit accepter tout brouillage radioélectrique subi, même si le brouillage est susceptible d'en compromettre le fonctionnement.

# 2 Description of the System

## 2.1 System Components

### Main Components

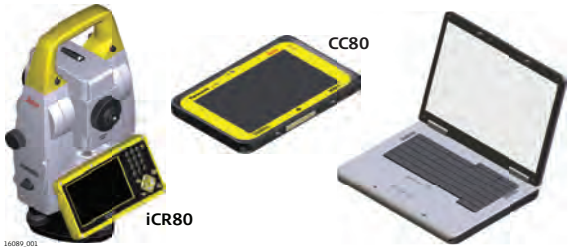


| Component | Description |
|---|---|
| iCR80 instrument | • a total station for measuring, calculating and capturing data.<br>• with a range of accuracy classes.<br>• combined with the multi-purpose construction field controller to conduct remote control surveys. |
| CC80 field controller | A multipurpose field controller allowing the remote control of the iCR80 via Bluetooth. |
| Infinity | The office software including a series of help programs which support working with Leica instruments. |

### Terms and abbreviations

The following terms and abbreviations can be found in this manual:

| Term | Description |
|---|---|
| EDM | Electronic Distance Measurement<br>EDM refers to the laser distancer incorporated into the instrument which enables distance measurement.<br>Two measuring modes are available:<br>• Prism mode. This mode refers to the ability to measure distances to prisms.<br>• Reflectorless mode. This mode refers to the ability to measure distances without prisms. |
| PinPoint | PinPoint refers to the Reflectorless EDM technology which enables an increased measuring range with a smaller laser spot size. Two options are available: R30 and R1000. |
| EGL | Electronic Guide Light<br>An EGL fitted to an instrument assists with prism targeting. It consists of two differently coloured flashing lights located in the instrument telescope housing. The person holding the prism can align themselves into the line of sight of the instrument. |
| ATRplus | Automatic Target Aiming.<br>ATRplus refers to the instrument sensor which enables the automatic target aiming and locking. |
| PowerSearch | PowerSearch (PS) refers to the instrument sensor which enables the automatic rapid finding of a prism. |

| Term | Description |
|---|---|
| Communication-Handle CCD6 | The CommunicationHandle CCD6 is an instrument carry handle with an integrated radio modem with attached antenna. |
| Communication side cover | Communication side cover with integrated Bluetooth, SD card slot and USB port is standard for a iCR80 instrument. |
| Machine Control Application | Enables optimal communication between iCR80 and 3D Machine Control Systems. To carry out machine calibration and alignment routines when used with Leica 3D Paving Systems. |
| Setup Pilot | A method to carry out the setup of the iCR80 to a number of existing control points in a fully automated way. |
| Cube Search | A method to optimise the prism search. Creates a cube-shaped search window around the position where the prism was lost. Dynamically , the search window is updated and adjusted in size depending on the distance between prism and iCR80. |
| Target Snap | A prism search method. Snaps to the desired prism by ignoring other prisms, which are known from the database. |

**Features of iCR80**

- Angle measurement
- Distance measurement to prism
- Distance measurement to any surface (reflectorless)
- Motorised
- Automatic Target Aiming
- PowerSearch (PS)
- RS232, USB and SD card interface
- Bluetooth
- Internal Flash Memory (2 GB)
- Hotshoe interface for CommunicationHandle
- Electronic Guide Light (EGL)
- WLAN

## 2.2 System Concept

### 2.2.1 Software Concept

**Description**

All instruments use the same software concept.

**Software**

| Software type | Description |
|---|---|
| System software | This software comprises the central functions of the instrument. It is also referred to as firmware. |
| iCON Field software | It is recommended to control the instrument with Leica Geosystems field software. Refer to the respective software manual for more information. |

**Software update**

☞ Uploading software can take some time. Ensure that the battery is at least 75% full before beginning the upload, and do not remove the battery during the upload process.

| | |
|---|---|
| ☞ | The iCON software is stored in the flash RAM of the iCON iCR80. |
| 1. | Download the most recent iCON iCR80 firmware file from https://myworld.leica-geosystems.com. |
| 2. | Insert an SD card or USB stick into the computer. |
| 3. | Copy the iCON iCR80 firmware file into the \SYSTEM folder on the storage device. If no \SYSTEM folder is available, then create the folder first. |
| 4. | Take the storage device out of the computer and insert it into the instrument. |
| 5. | Start the iCON iCR80 and the iCON software. |
| 6. | Tap on **System**. |
| 7. | Tap on **FW Update**. |
| 8. | Select the firmware file. |
| 9. | Tap ✔ to start the firmware update. |
| ☞ | *A message will appear when the upload is complete.* |

**Licence activation**

| | |
|---|---|
| ☞ | Licences are key codes to enable software functions and applications which run on the instrument.<br>You can order new licences on myWorld or by contacting your local service partner. |
| 1. | Store the licence key file (*.key) on an SD card or a USB memory stick.<br>☞ Alternatively have a printout of a licence key at hand. |
| 2. | Insert the SD card or USB memory stick into the iCR80. Refer to "4.6 Working with the Memory Device". |
| 3. | Turn on the iCR80. |
| 4. | In the iCON software:<br>Select **System > Add Licences**. |
| 5. | Upload the licence key file or type in the licence code manually.<br>**To upload a licence key file:**<br>• Tap on **Load Key From** to define the storage location of the licence key file.<br>• Select the licence key file.<br>• Tap ✔ to start the activation process.<br>**To type in a licence key:**<br>• Tap into the input field to activate the virtual keyboard.<br>• Type in the licence key from the printout.<br>• Tap ✔ to start the activation process.<br>*A pop-up informs you about the licence activation status.*<br>Confirm the message. |
| ☞ | If the software maintenance licence has expired:<br>Contact your local service partner to update the software on the instrument. |
| ☞ | If the licence activation fails:<br>Contact your local service partner or create a support request on myWorld. |

## 2.2.2 Power Concept

**General**

Use the batteries, chargers and accessories recommended by Leica Geosystems to ensure the correct functionality of the instrument.

**Power options**

- Internally by GEB222 battery, OR
- Externally by GEV52 cable and GEB371 battery.

☞ If an external power supply is connected and the internal battery is inserted, then the external power is used.

## 2.2.3 Data Storage Concept

**Description**

Data is stored on a memory device. The memory device can be an SD card or internal memory. For data transfer an USB stick can also be used.

**Memory device**

| Device | Description |
|---|---|
| SD card | All instruments have an SD card slot fitted as standard. An SD card can be inserted and removed. Available capacity: 1 GB and 8 GB. |
| USB stick | All instruments have a USB port fitted as standard. |
| Internal memory | All instruments have an internal memory fitted as standard. Available capacity: 2 GB. |

☞ While other SD cards/USB sticks can be used, Leica Geosystems recommends to only use Leica SD cards/USB sticks and is not responsible for data loss or any other error that can occur while using a non-Leica SD card/USB stick.

☞ Unplugging connecting cables or removing the SD card or USB stick during the measurement can cause loss of data. Only remove the SD card or USB stick or unplug connecting cables when the iCR instrument is switched off.

**Transfer data**

Data can be transferred in various ways.

☞ SD cards can directly be used in an OMNI drive as supplied by Leica Geosystems. Other PC card drives can require an adaptor.

**Container contents for instrument and accessories**

**Bottom part**

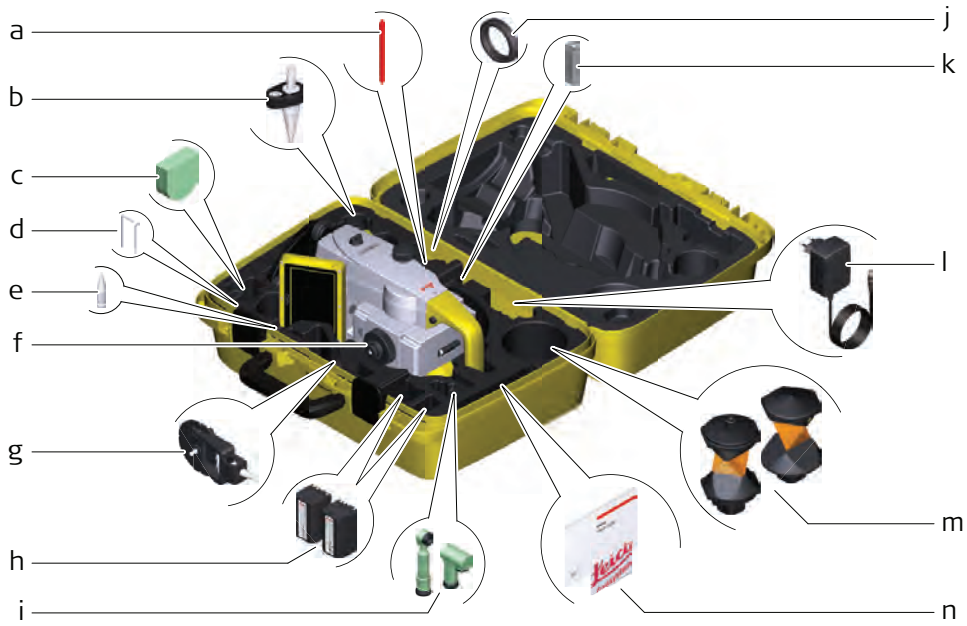


16553_001

a Stylus
b GLS14 mini pole
c GHM007 Instrument height meter
d Allen key and adjustment tool
e Tip for GMP101 mini prism
f Instrument with tribrach and standard handle or Communication-Handle
g GMP101 mini prism
h GEB222 batteries
i GFZ3 or GOK6 diagonal eyepiece
j Counterweight for diagonal eyepiece
k MS1, 1 GB USB memory stick
l GEV192 AC power supply for battery charger
m GRZ4 or GRZ122 prism
n Manuals and USB documentation card

**Top part**

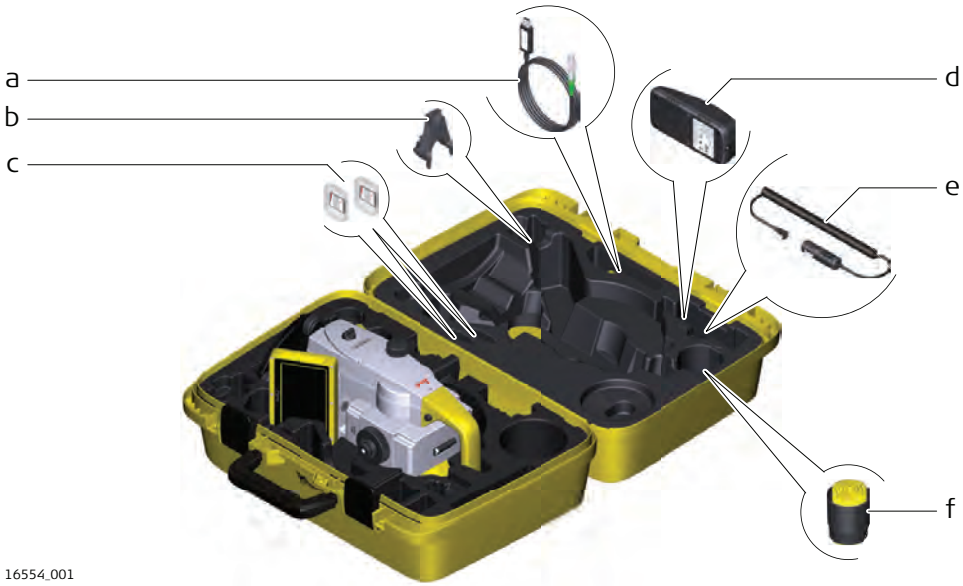


a Cables
b GHT196 tribrach bracket for height meter
c SD cards and covers
d GKL311 battery charger
e Car adapter power plug for battery charger (stored under battery charger)
f Protective cover for instrument, sunshade for objective lens and cleaning cloth

## 2.4 Instrument Components

**iCR80 instrument components part 1 of 2**


a Carry handle
b Optical sight
c Telescope, integrating EDM, ATRplus, EGL, PS
d EGL flashing diode - yellow and red
e PowerSearch, transmitter
f PowerSearch, receiver
g Coaxial optics for angle and distance measurement, and exit port of visible laser beam for distance measurements
h Compartment for SD Card and USB stick
i Loudspeaker
j Horizontal drive
k Tribrach footscrew
l Second keyboard (optional)

**iCR80 instrument components part 2 of 2**


a Vertical drive
b Focusing ring
c Interchangeable eyepiece
d Circular level
e Battery compartment
f Touch screen
g Stylus for touch screen
h Keyboard

**Communication side cover**

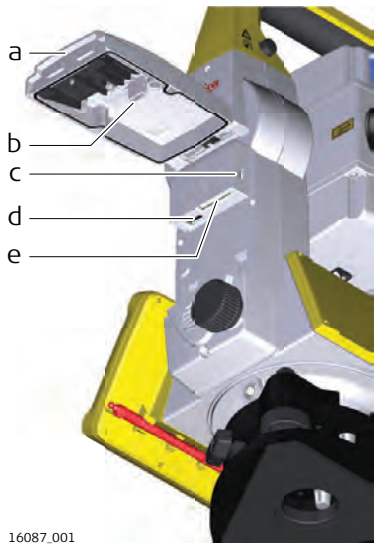


a Compartment lid
b USB stick cap storage
c USB device port (mini AB OTG)
d USB host port for USB stick
e SD card port

**Instrument components for remote mode**


a CommunicationHandle
b Communication side cover

# 3 User Interface

## 3.1 Keyboard

### iCR80 keyboard

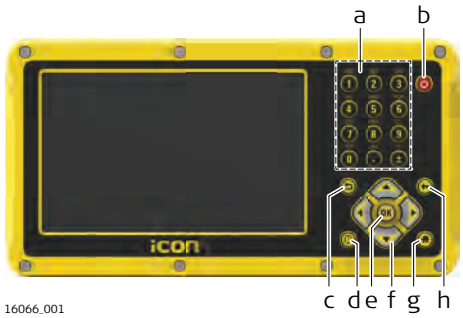


a Alphanumeric keys
b ON/OFF
c Back or Cancel
d Measure
e OK
f Arrow keys
g Home
h Backspace

### Keys

| Key | | Function |
|---|---|---|
| Alphanumeric keys | STU 7 | To type letters and numbers. |
| ON/OFF | | If the instrument is already off: Turns on the instrument when held for 2 s.<br>If the instrument is already on: Displays the "Logout/ Shutdown" screen when held for 2 s. |
| Back or Cancel | | To leave the current screen without storing any changes.<br>To close an info message. |
| Backspace | | Deletes the last character in an entry field. |
| Measure | | ☞ This functionality is available if a measurement application is active on the field controller. The functionality of the key can vary depending on the configuration of the measure bar (**Measure** or **Meas +Rec**).<br>Starts the measurement in the currently selected measurement mode . |
| Lock | | ☞ This functionality is available if the instrument is connected to a field controller and if no measurement application is active on the field controller.<br>Starts a prism search and locks onto prism. |
| Home | | Switches to the iCON Main Menu. |
| Arrow keys | | Allow moving the focus on the screen or paging through a list. |

| Key | | Function |
|---|---|---|
| OK | OK | Selects the highlighted line and leads to the next logical menu / dialog.<br>Starts the edit mode for editable fields.<br>Opens a selectable list. |

## 3.2 Operating Principles

**Keyboard and touch screen**

The user interface is operated on the touch screen. In some applications, the keyboard can be used instead. Refer to iCON build How to guide and iCON site How to guide for information.

**Home menu elements**

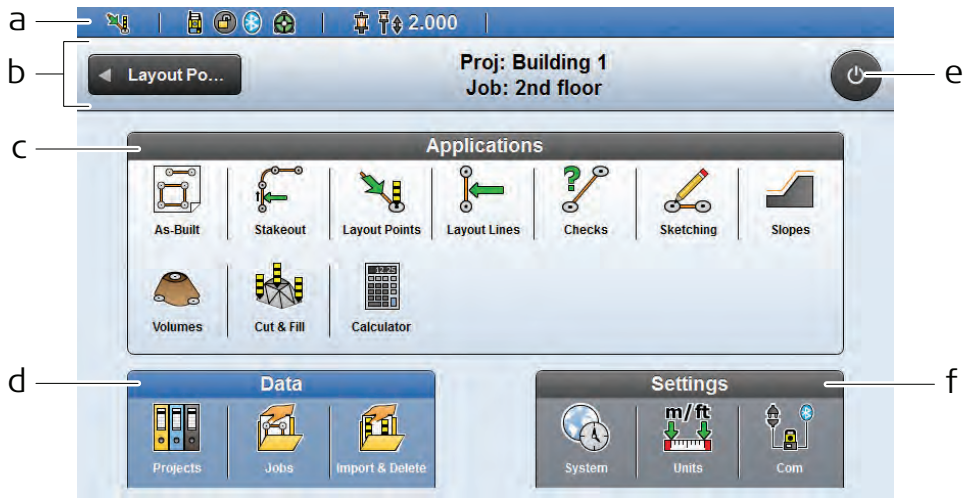


16582_001_en

| | | | |
|---|---|---|---|
| a | Status bar | d | Data container |
| b | Title bar | e | Power key |
| c | Application container | f | Settings container |

## Map screen elements

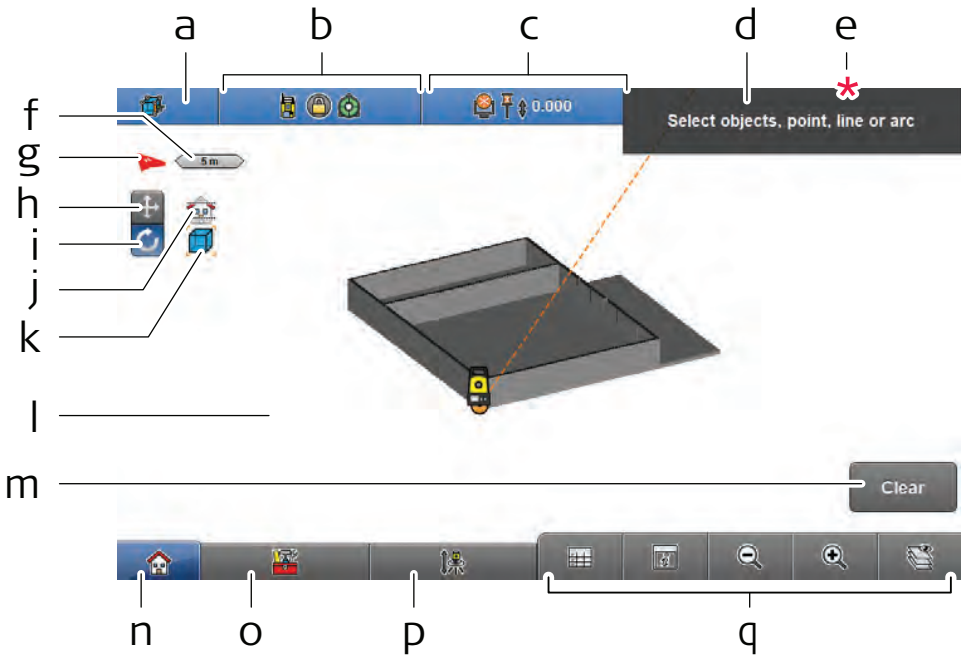


16583_002

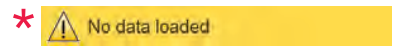


| | | | |
|---|---|---|---|
| a | Application indicator | i | Change button for perspective mode (3D) |
| b | Status sensor | j | Elevation Filter indicator |
| c | Status target | k | Isolation mode indicator |
| d | Information bar | l | Main map area |
| e | Warning bar (only displayed if there is an issue) | m | Measure bar |
| f | Scale bar | n | Home |
| g | North and 3D indicator | o | Toolbox |
| h | Change button for panning mode | p | Setup |
| | | q | Map handler |

## 3.3 CommunicationHandle

### LED indicators on Communication-Handle

**Description**

The CommunicationHandle has Light Emitting Diode (LED) indicators. They indicate the basic CommunicationHandle status.

**Diagram of the LED Indicators**


a Power LED
b Link LED
c Data Transfer LED
d Mode LED

**Description of the LED Indicators**

| LED | LED Status | Description |
|---|---|---|
| Power LED | off | Power is off. |
| | green | Power is on. |
| Link LED | off | No radio link to field controller. |
| | red | Radio link to field controller. |
| Data Transfer LED | off | No data transfer to/from field controller. |
| | green or green flashing | Data transfer to/from field controller. |
| Mode LED | off | Data mode. |
| | red | Configuration mode. |

## 4.1 Instrument Setup

**Instrument setup step-by-step**


| | |
|---|---|
| 1. | Extend the tripod legs to allow for a comfortable working posture. Position the tripod above the marked ground point, centring it as good as possible. Ensure that the tripod plate is roughly horizontal. |
| 2. | Fasten the tribrach and instrument onto the tripod. |
| ☞ | Shield the instrument from direct sunlight and avoid uneven temperatures around the instrument. |
| 3. | Turn on the instrument.<br>To activate the laser plummet, display the Compensator screen:<br>• Select **Devices** from the Home Menu.<br>• Tap the arrow button to the right of the device name.<br>• Tap **Compensator**. |
| 4. | Use the tribrach footscrews (a) to centre the plummet above the ground point (b). |
| 5. | Adjust the tripod legs to level the circular level (c). |
| 6. | By using the electronic level, turn the tribrach footscrews (a) to level the instrument precisely. |
| 7. | Centre the instrument precisely over the ground point (b) by shifting the tribrach on the tripod plate. |
| 8. | Repeat steps 6. and 7. until the required accuracy is achieved. |

**Attaching the CommunicationHandle step-by-step**

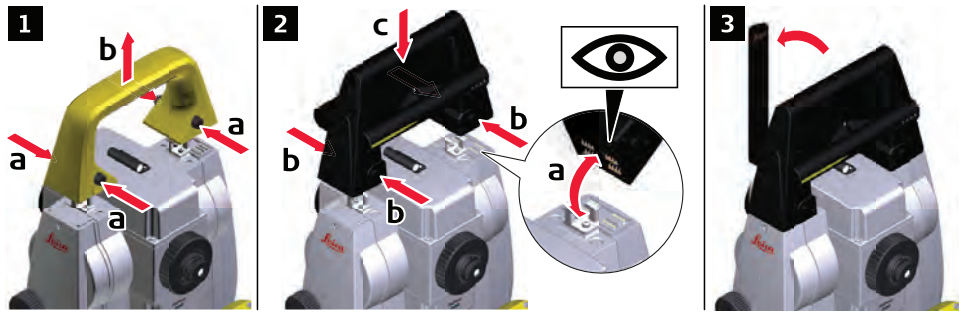


16200_001

| | |
|---|---|
| ☞ | Refer to "4.1 Instrument Setup" for the initial instrument setup onto a tripod. |
| 1. | To remove the instrument carry handle: Press and hold the four unlock push buttons and lift off the handle. |
| 2. | To install the CommunicationHandle, first make sure that the interface connection on the lower part of the handle is on the same side as the Communication side cover. Then press and hold the four unlock push buttons and attach the handle. |
| ☞ | Ensure that there is a tight fit with the instrument after releasing the push buttons. If no connection can be found, re-check that handle is seated firmly. |
| 3. | Swing the antenna of the CommunicationHandle into an upright position. |
| ☞ | Refer to field software manual for additional information. |

**Setup for remote control with CommunicationHandle**

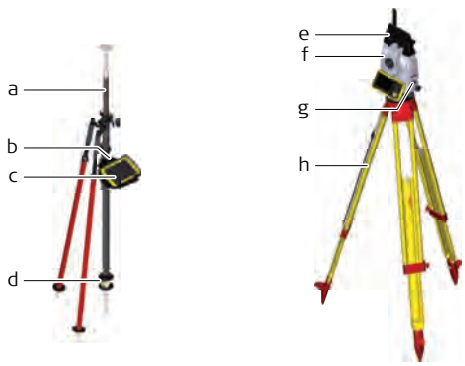


16464_001

| | |
|---|---|
| a | Prism pole |
| b | GHT63 clamp |
| c | CC80 field controller on CMB10 holder |
| d | 360° prism |
| e | CCD6/RH16/RH17 CommunicationHandle |
| f | Instrument |
| g | Communication side cover |
| h | Tripod |

## Holder for iCON CC80

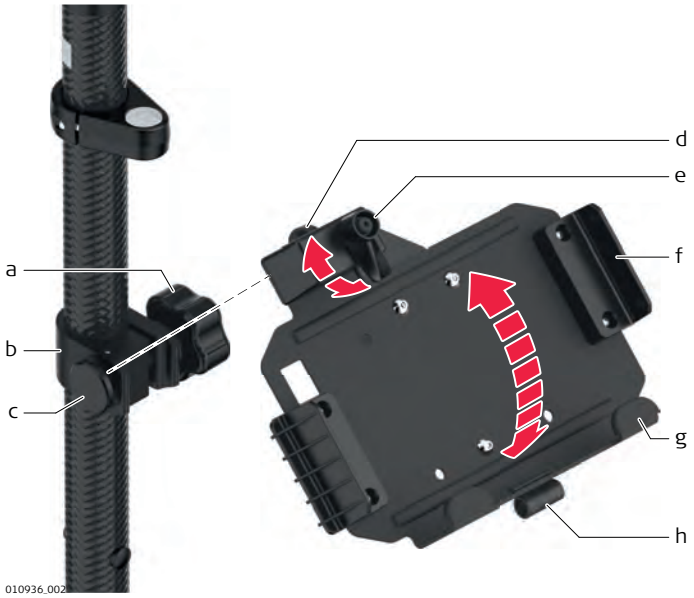


**Clamp**

| | |
|---|---|
| a | Tightening screw |
| b | Pole clamp |
| c | Clamping bolt |

**Holder**

| | |
|---|---|
| d | Mounting arm |
| e | Locking lever |
| f | Mounting brackets (side) |
| g | Mounting brackets (bottom) |
| h | Holder for stylus |

## Fixing the CC80 tablet to a pole step-by-step

| | |
|---|---|
| ☞ | For an aluminium pole, fit the plastic sleeve to the pole clamp. |
| 1. | Insert the pole into the clamp hole. |
| 2. | Attach the holder to the clamp using the clamp bolt. |
| 3. | Adjust the angle and the height of the holder on the pole to a comfortable position. |
| 4. | Tighten the clamp with the clamp bolt. |
| 5. | Before placing the CC80 tablet onto the mounting plate, ensure that the locking lever is set to the unlocked position (see illustration).  16447_001 |
| 6. | Lower the bottom side of the tablet and slide it into the bottom mounting brackets of the holder.  16448_001 |

7. After placing the tablet onto the mounting plate, set the locking lever to the locked position (see illustration).

16449_001

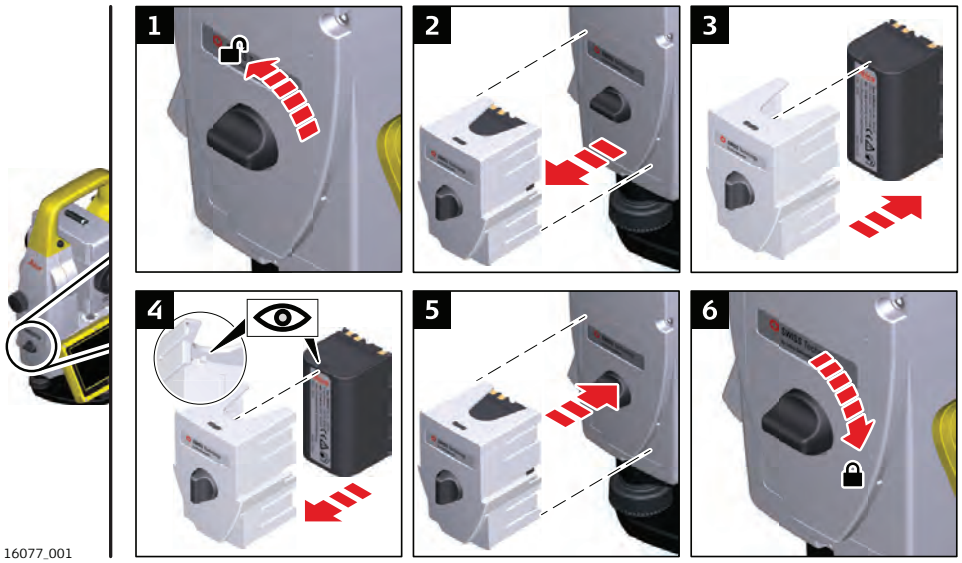


16077_001

1. Face the instrument so that the vertical drive screw is on the left. The battery compartment is below the vertical drive. Turn the knob to the vertical position, opening the lid of the battery compartment.
2. Pull out the battery housing.
3. Pull the battery out of the battery housing.
4. ☞ At the top of the battery is a notch which corresponds to the inner surface of the battery housing. This notch helps you to place the battery correctly.

   Place the battery into the battery housing, ensuring that the contacts are facing outward. Click the battery into position.
5. Place the battery housing into the battery compartment. Push the battery housing in until it fits completely into the battery compartment.
6. Turn the knob to lock the battery compartment. Ensure that the knob is returned to its original horizontal position.

**Detaching the tablet from the holder/pole step-by-step**

1. Set the locking lever of the holder to the unlocked position.

16450_001

2. Lift the top side of the tablet and slide the tablet to the top and out of the holder.

16451_001

## 4.4 Batteries

### 4.4.1 Operating Principles

**First-time use/ charging batteries**

- The battery must be charged before using it for the first time because it is delivered with an energy content as low as possible.
- The permissible temperature range for charging is from 0 °C to +40 °C/+32 °F to +104 °F. For optimal charging, we recommend charging the batteries at a low ambient temperature of +10 °C to +20 °C/+50 °F to +68 °F if possible.
- It is normal for the battery to become warm during charging. Using the chargers recommended by Leica Geosystems, it is not possible to charge the battery once the temperature is too high.
- For new batteries or batteries that have been stored for a long time (> three months), it is effectual to make only one charge/discharge cycle.
- For Li-Ion batteries, a single discharging and charging cycle is sufficient. We recommend carrying out the process when the battery capacity indicated on the charger or on a Leica Geosystems product deviates significantly from the actual battery capacity available.

**Operation/discharging**

- The batteries can be operated from −20 °C to +55 °C/−4 °F to +131 °F.
- Low operating temperatures reduce the capacity that can be drawn; high operating temperatures reduce the service life of the battery.

## 4.4.2 Battery for the iCR Instrument

**Change battery step-by-step**

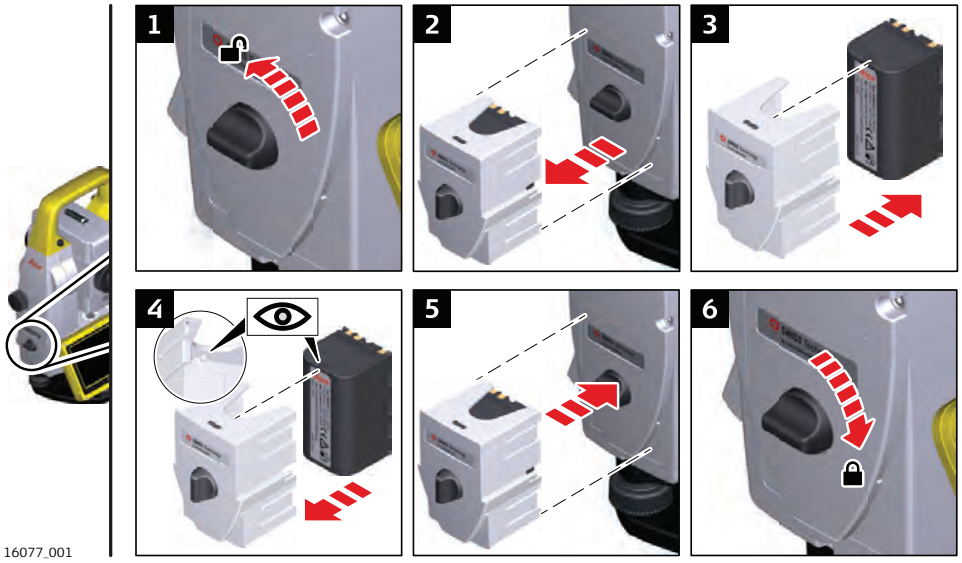


| | |
|---|---|
| 1. | Face the instrument so that the vertical drive screw is on the left. The battery compartment is below the vertical drive. Turn the knob to the vertical position, opening the lid of the battery compartment. |
| 2. | Pull out the battery housing. |
| 3. | Pull the battery out of the battery housing. |
| 4. | ☞ At the top of the battery is a notch which corresponds to the inner surface of the battery housing. This notch helps you to place the battery correctly.<br>Place the battery into the battery housing, ensuring that the contacts are facing outward. Click the battery into position. |
| 5. | Place the battery housing into the battery compartment. Push the battery housing in until it fits completely into the battery compartment. |
| 6. | Turn the knob to lock the battery compartment. Ensure that the knob is returned to its original horizontal position. |

## 4.5 Power Functions

**Power functions**

| Option | Key | Description |
|---|---|---|
| Turn on | ON/OFF | Press and hold for 2 s.<br>☞ The instrument must have a power supply. |

| Option | Key | Description |
|---|---|---|
| Turn off | ON/OFF | Press and hold for 2 s.<br>*The "Logout/Shutdown" screen is displayed.*<br>Select Shutdown controller and sensor.<br>☞ For instruments set up in permanent installations with external power sources, for example monitoring, ensure external power remains available until the instrument has successfully completed the power down process. |
| Reset | ON/OFF | Press and hold for 2 s.<br>*The "Logout/Shutdown" screen is displayed.*<br>Choose one of the available reset options. |
| Hard shutdown | ON/OFF | Press and hold for more than 8 s:<br>• *After 2 s, the "Logout/Shutdown" screen is displayed.*<br>• Continue to press and hold until instrument shuts down. |

## 4.6 Working with the Memory Device

☞
- Keep the card dry.
- Use it only within the specified temperature range.
- Do not bend the card.
- Protect the card from direct impacts.

☞ Failure to follow these instructions could result in data loss and/or permanent damage to the card.

**Insert and remove an SD card step-by-step**

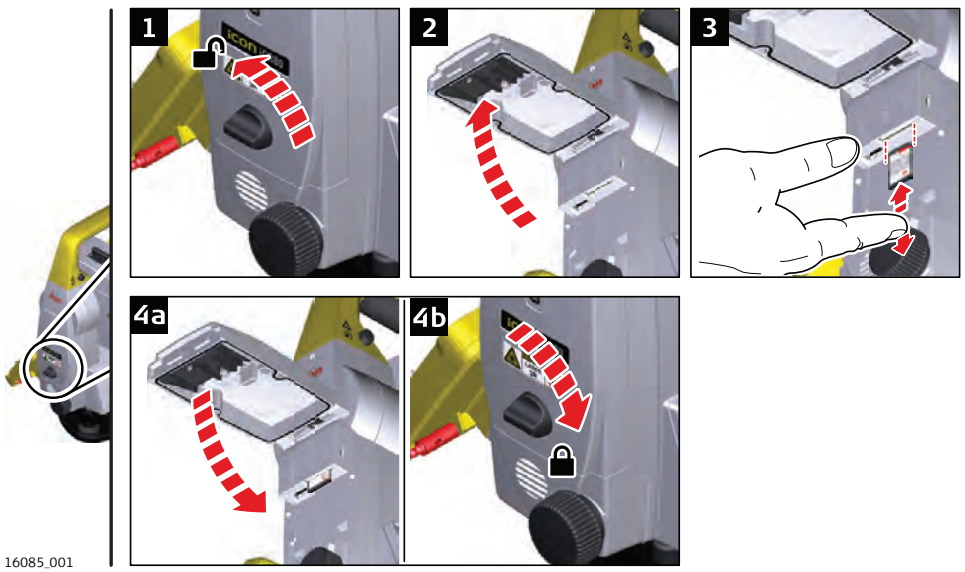


☞ The SD card is inserted into a slot inside the Communication side cover of the instrument.

1. Turn the knob on the Communication side cover to the vertical position to unlock the communication compartment.

2. Open the lid of the communication compartment to access the communication ports.

3. 
   - To insert the SD card, slide it firmly into the SD slot until it clicks into position.
   - To remove the SD card, gently press on the top of the card to release it from the slot.

   ☞ The card must be held with the contacts at the top and facing toward the instrument.

   ☞ Do not force the card into the slot.

4. Close the lid and turn the knob to the horizontal position to lock the communication compartment.

**Insert and remove a USB stick step-by-step**

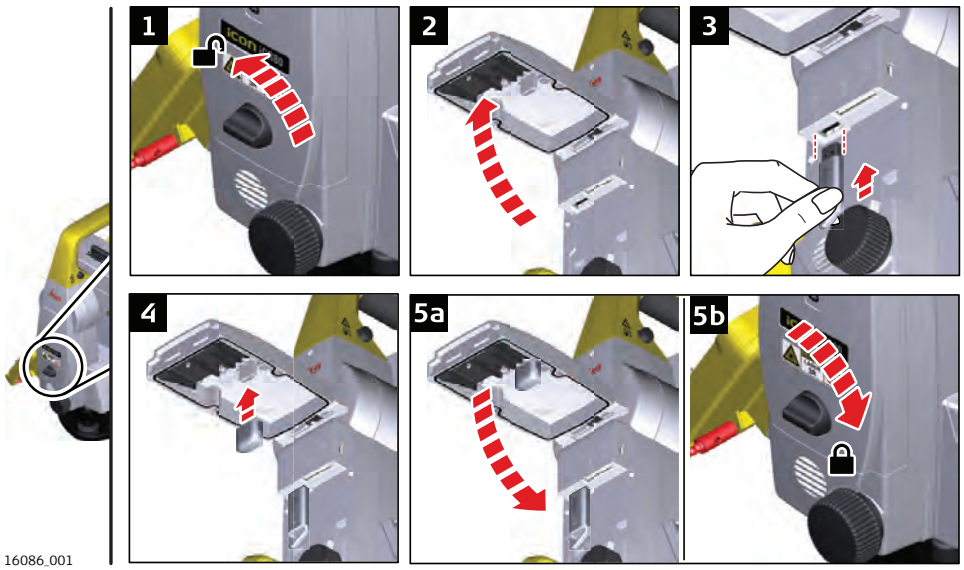


☞ The USB stick is inserted into the USB host port inside the Communication side cover of the instrument.

1. Turn the knob on the Communication side cover to the vertical position to unlock the communication compartment.

2. Open the lid of the communication compartment to access the communication ports.

3. Slide the USB stick with the Leica logo facing you firmly into the USB host port until it clicks into position.

   ☞ Do not force the USB stick into the port.
   To remove the USB stick, slide the USB stick out of the port.

4. If desired, store the lid of the USB stick on the underside of the compartment lid.

5. Close the lid and turn the knob to the horizontal position to lock the compartment.

## 4.7 Connecting to a Personal Computer

**Description**

Windows Mobile Device Center for PC with Windows 7/Windows 8/Windows 10 operating system is the synchronization software for Windows mobile-based

pocket PC. WMDC enables a PC and a Windows mobile-based pocket PC to communicate.

Leica USB drivers support Windows 7, Windows 8 (8.1) and Windows 10 operating systems.

**Cables**

Leica USB drivers support:

| Name | Description |
|---|---|
| GEV223 | USB data cable, 1.8 m, connects instrument to Mini-USB to USB |
| GEV234 | USB data cable, 1.65 m, connects CC to iCG or CC to PC (USB) |
| GEV261 | Y-cable, 1.8 m, connects instrument to PC – battery |

**Uninstalling the previous drivers**

☞ Skip the following steps if you have never installed Leica USB drivers before.

If older drivers were previously installed on the PC, follow the instructions to uninstall the drivers prior the installation of the new drivers.

1. Connect your instrument to the PC via cable.
2. On your PC, select to **Control Panel** > **Device Manager**.
3. In **Network Adapters**, right-click on **Remote NDIS based LGS...**.
4. Click on **Uninstall**.

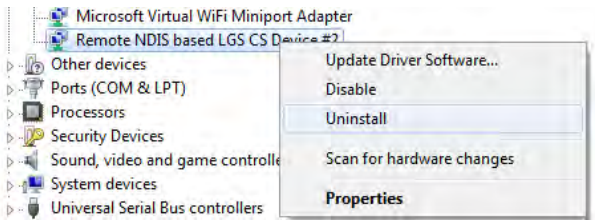


5. Set **Delete the driver...** as checked. Press **OK**.


**Install Leica USB drivers**

1. Start the PC.

2. Run the **Setup_Leica_USB_XXbit.exe** to install the drivers necessary for Leica devices. Depending on the version (32bit or 64bit) of the operating system on your PC, you have to select between the three setup files following:
   - Setup_Leica_USB_32bit.exe
   - Setup_Leica_USB_64bit.exe
   - Setup_Leica_USB_64bit_itanium.exe

   ☞ To check the version of your operating system, go to **Control Panel** > **System** > **System type**.

   ☞ The setup requires administrative privileges.

   ☞ The setup has to be run only once for all Leica devices.

3. The **Welcome to InstallShield Wizard for Leica GS, TS/TM/MS, CS and GR USB drivers** window appears.

   ☞ Ensure that all Leica devices are disconnected from your PC before you continue!

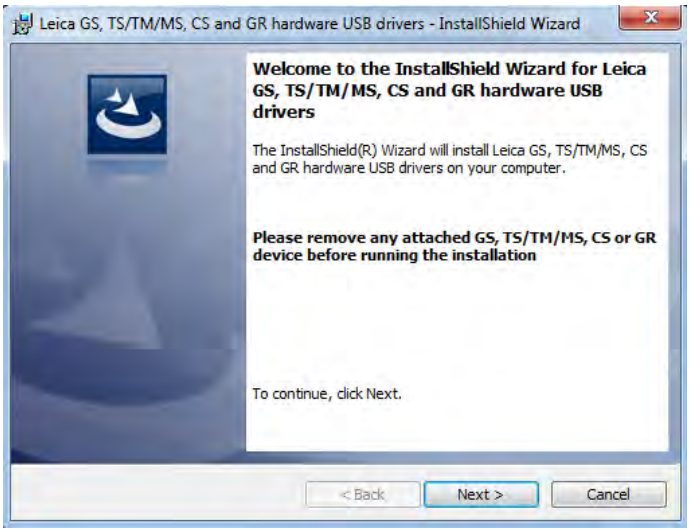


4. Click **Next>**.

5. The **Ready to Install the Program** window appears.

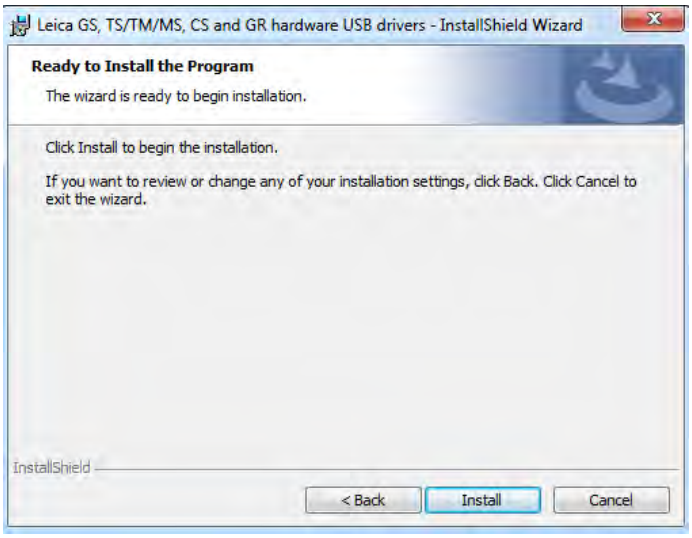


6. Click **Install**. The drivers will be installed on your PC.

| | |
|---|---|
| 7. | The **InstallShield Wizard Completed** window appears. |
| 8. | Click **Finish** to exit the wizard. |

**Connect to PC via USB cable step-by-step**

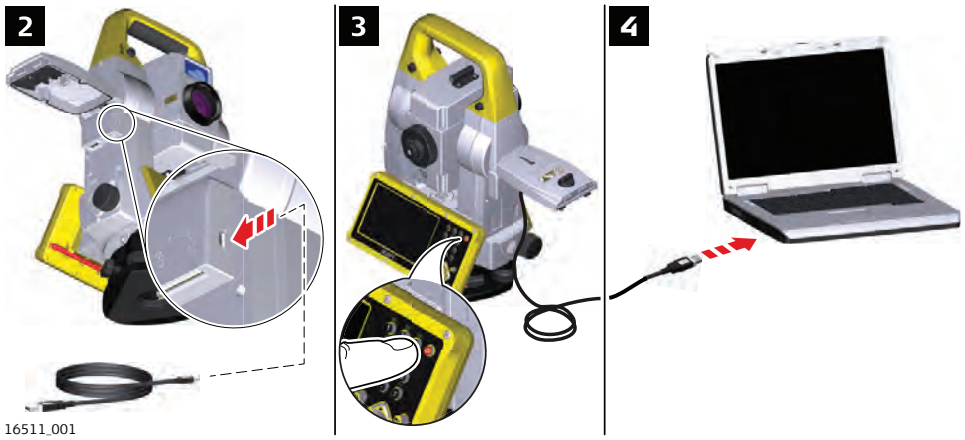


| | |
|---|---|
| 1. | Start the PC. |
| 2. | Plug the cable into the instrument. |
| 3. | Turn on the instrument. |
| 4. | Plug the cable into the USB port of the PC. |
| 5. | Press the Windows Start button at the bottom left corner of the screen. |
| 6. | Type the IP address of the device into the search field.<br>\\192.168.254.3\ |
| 7. | Press **Enter**.<br>A file browser opens. You can now browse within the folders on the instrument. |

## 4.8 Guidelines for Correct Results

**Distance measurement**

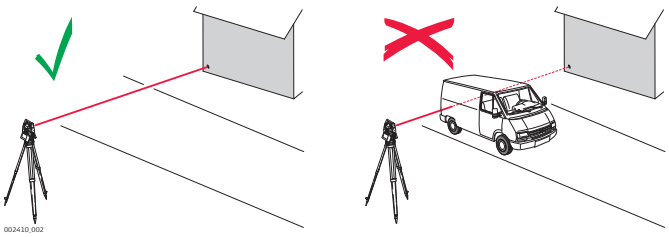


When measurements are being made using the red laser EDM, the results can be influenced by objects passing between the EDM and the intended target surface. This occurs because reflectorless measurements are made to the first surface returning sufficient energy to allow the measurement to take place. For example, if the intended target surface is the surface of a building, but a vehicle passes between the EDM and the target surface as the measurement is triggered, the measurement may be made to the side of the vehicle. The result is the distance to the vehicle, not to the surface of the building.

☞ Very short distances can also be measured reflectorless in Prism mode to well reflecting natural targets. The distances are corrected with the additive constant defined for the active reflector.

☞ Accurate measurements to prisms should be made in prism mode.

☞ When a distance measurement is triggered, the EDM measures to the object which is in the beam path at that moment. If a temporary obstruction, for example a passing vehicle, heavy rain, fog or snow is between the instrument and the point to be measured, the EDM may measure to the obstruction.

☞ Do not measure with two instruments to the same target simultaneously to avoid getting mixed return signals.

**ATRplus/Lock**

Instruments equipped with an ATRplus sensor permit automatic angle and distance measurements to prisms. The prism is sighted with the optical sight. After initiating a distance measurement, the instrument sights the prism centre automatically. Vertical and horizontal angles and the distance are measured to the centre of the prism. The lock mode enables the instrument to follow a moving prism.

☞ As with all other instrument errors, the collimation error of the automatic aiming must be redetermined periodically. Refer to "5 Check & Adjust" about checking and adjusting instruments.

☞ When a measurement is triggered while the prism is still moving, distance and angle measurements may not be made for the same position and coordinates may vary.

☞ If the prism location is changed too quickly, the target may be lost. Make sure that the speed does not exceed the figure given in the technical data.

# 5 Check & Adjust

## 5.1 Overview

**Description**

Leica Geosystems instruments are manufactured, assembled and adjusted to the best possible quality. Quick temperature changes, shock or stress can cause deviations and decrease the instrument accuracy. It is therefore recommended to check and adjust the instrument from time to time. This check and adjust can be done in the field by running through specific measurement procedures. The procedures are guided and must be followed carefully and precisely as described in the following chapters. Some other instrument errors and mechanical parts can be adjusted mechanically.

**Electronic adjustment**

The following instrument errors can be checked and adjusted electronically:

| Instrument error | Description |
|---|---|
| l, t | Compensator longitudinal and transversal index errors |
| i | Vertical index error, related to the standing axis |
| c | Horizontal collimation error, also called line of sight error |
| a | Tilting axis error |
| ATRplus | ATRplus zero point error for Hz and V |

If the compensator and the horizontal corrections are activated in the instrument configuration, every angle measured in the daily work is corrected automatically. Check whether the tilt correction and the horizontal correction are turned on.

The results are displayed as errors but used with the opposite sign as corrections when applied to measurements.

**Mechanical adjustment**

The following instrument parts can be adjusted mechanically:

- Circular level on instrument and tribrach
- Optical plummet - option on tribrach
- Allen screws on tripod

**Precise measurements**

To get precise measurements in the daily work, it is important:

- To check and adjust the instrument from time to time.
- To take high precision measurements during the check and adjust procedures.
- To measure targets in two faces. Some of the instrument errors are eliminated by averaging the angles from both faces.

☞ During the manufacturing process, the instrument errors are carefully determined and set to zero. As mentioned above, these errors can change and it is highly recommended to redetermine them in the following situations:

- Before the first use
- Before every high precision survey
- After rough or long transportation
- After long working periods
- After long storage periods
- If the temperature difference between current environment and the temperature at the last calibration is more than 20 °C

**Summary of errors to be adjusted electronically**

| Instrument error | Effects Hz | Effects V | Elimination with two face measurement | Automatically corrected with proper adjustment |
|---|---|---|---|---|
| c - Line of sight error | ✓ | – | ✓ | ✓ |
| a - Tilting axis error | ✓ | – | ✓ | ✓ |
| l - Compensator index error | – | ✓ | ✓ | ✓ |
| t - Compensator index error | ✓ | – | ✓ | ✓ |
| i - Vertical index error | – | ✓ | ✓ | ✓ |
| ATRplus Collimation error | ✓ | ✓ | – | ✓ |

## 5.2 Preparation

☞ 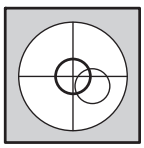

Before determining the instrument errors, the instrument has to be levelled using the electronic level.
The tribrach, the tripod and the underground should be stable and secure from vibrations or other disturbances.

☞ 

The instrument should be protected from direct sunlight to avoid thermal warming.
It is also recommended to avoid strong heat shimmer and air turbulence. The best conditions are early in the morning or with overcast sky.

☞ Before starting to work, the instrument has to become acclimatised to the ambient temperature. Take at least 15 minutes into account or approximately 2 minutes per °C of temperature difference from storage to working environment.

☞ Even after adjustment of the ATRplus, the crosshairs may not be positioned exactly on the centre of the prism after an ATRplus measurement has been completed. This outcome is a normal effect. To speed up the ATRplus measurement, the telescope is normally not positioned exactly on the centre of the

prism. These small deviations ATRplus offsets, are calculated individually for each measurement and corrected electronically. This means that the horizontal and vertical angles are corrected twice: first by the determined ATRplus errors for Hz and V, and then by the individual small deviations of the current aiming.

**Next step**

- **Adjusting a combination of instrument errors**
  Refer to "5.3 Combined Adjustment (l, t, i, c and ATRplus)".
- **Adjusting the circular level**
  Refer to "5.4 Adjusting the Circular Level of the Instrument and Tribrach".
- **Adjusting the laser/optical plummet**
  Refer to "5.6 Inspecting the Laser Plummet of the Instrument".
- **Adjusting the tripod**
  Refer to "5.7 Servicing the Tripod".

## 5.3 Combined Adjustment (l, t, i, c and ATRplus)

**Description**

The combined adjustment procedure determines the following instrument errors in one process:

| Instrument error | Description |
|---|---|
| l, t | Compensator longitudinal and transversal index errors |
| i | Vertical index error, related to the standing axis |
| c | Horizontal collimation error, also called line of sight error |
| ATRplus Hz | ATRplus zero point error for horizontal angle option |
| ATRplus V | ATRplus zero point error for vertical angle option |

**Combined adjustment procedure step-by-step**

The following description explains the most common settings:

☞ It is recommended to use a clean Leica circular prism as target. Do not use a 360° prism.

1. 
   - Connect the device with the Instrument.
   - Select **Sensor** from the Home Menu.
   - Select your instrument and tap the arrow.


2. Select **Sensor Calibration**.

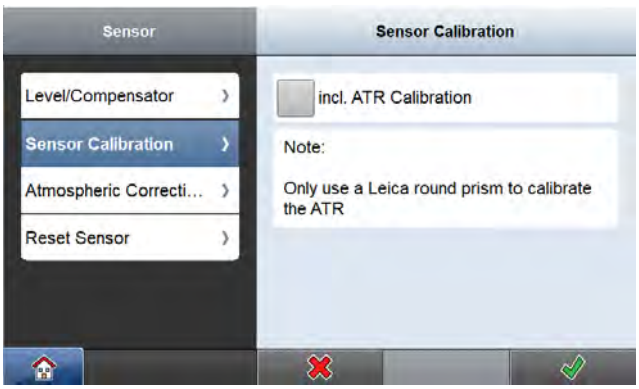

- Select the **incl. ATR Calibration** option if you like to calibrate the ATR.
- To start calibration, tap ✓.
  Follow the wizard which guides through the calibration.

3.
- Aim the telescope accurately at a target at about 100 m distant. The target must be positioned within ± 9°/± 10 gon of the horizontal plane.
- Start the procedure in face I.
  Motorised instruments change automatically to face I.
- Press the measurement keys to measure and to continue to the next step.
  Tap in the wizard to get to the next page.

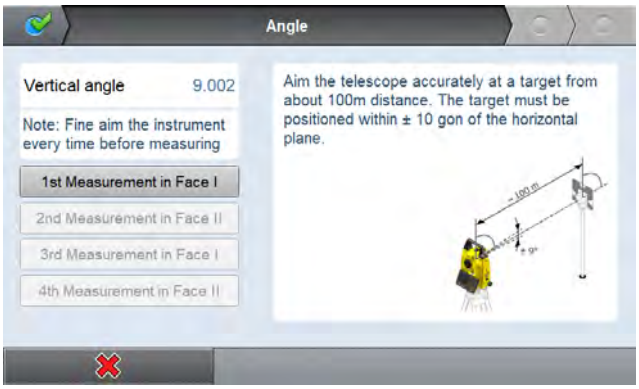


☞ The fine aiming has to be performed manually in both faces.

4.


- Aim the telescope accurately at a target at about 100 m distant or less if not possible. The target must be positioned at least 27°/30 gon above or beneath the horizontal plane.
- Start the procedure in face I.
  Motorised instruments change automatically to the other face.
- Press the measurement keys to measure and to continue to the next step.
  Tap in the wizard to get to the next page.

☞ The fine aiming has to be performed manually in both faces.

5. **Adjustment Accuracy**
After pressing the last in the wizard the results are shown and stored to the instrument.

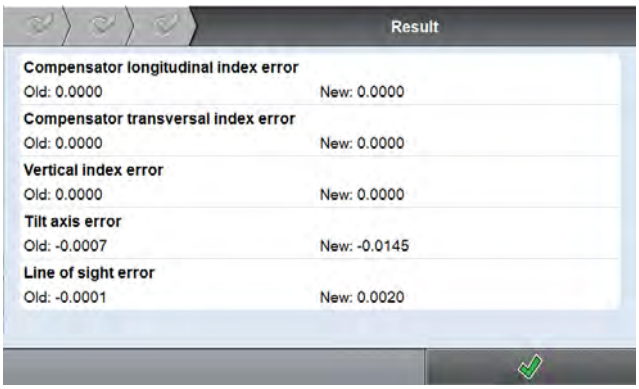


6. Tap ✓ to get back to the **Devices** page.

## 5.4 Adjusting the Circular Level of the Instrument and Tribrach

**Adjusting the circular level step-by-step**

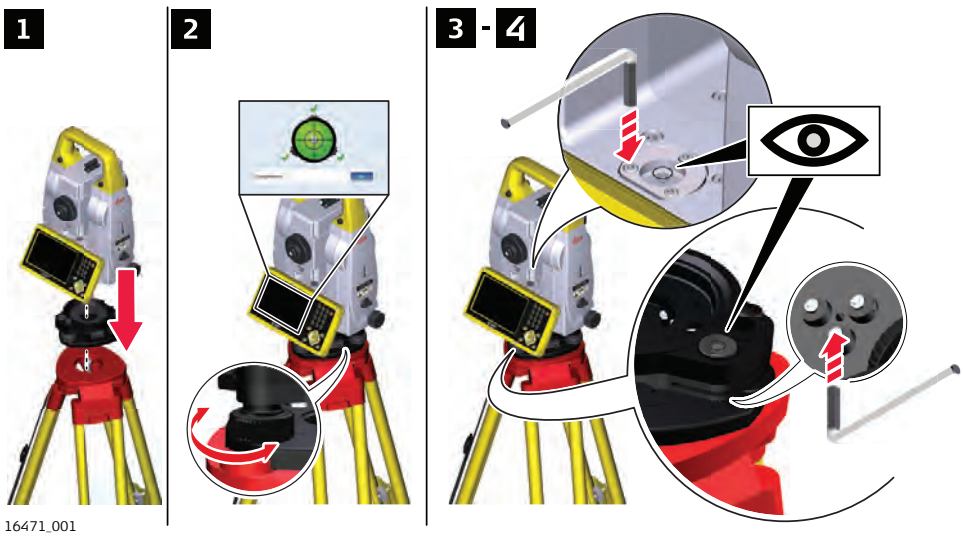


16471_001

1. Place and secure the instrument into the tribrach and onto a tripod.
2. Turn on the instrument. Using the tribrach footscrews, level the instrument with the electronic level.

☞ Electronic level:
- Select **Devices** from the Home Menu.
- Tap the arrow button to the right of the device name.
- To display the electronic level, tap **Compensator**.

3. Check the position of the circular level on the instrument and tribrach.

☞ If both circular levels are centred, no adjustments are necessary.

4. If one or both circular levels are not centred, adjust as follows:
**Instrument**: If it extends beyond the circle, use the supplied allen key to centre it with the adjustment screws. Turn the instrument by 200 gon (180°). Repeat the adjustment procedure if the circular level does not stay centred.
**Tribrach**: If it extends beyond the circle, use the supplied allen key to centre it with the adjustment screws.

☞ After the adjustments, all adjusting screws must have the same tightening tension and no adjusting screw should be loose.

## 5.5 Adjusting the Circular Level of the Prism Pole

**Adjusting the circular level step-by-step**

1. Suspend a plumb line.
2. Use a pole bipod, to align the prism pole parallel to the plumb line.
3. Check the position of the circular level on the prism pole.
4. 
   a If the circular level is centred, no adjustment is necessary.
   b If the circular level is not centred, use an allen key to centre it with the adjustment screws.

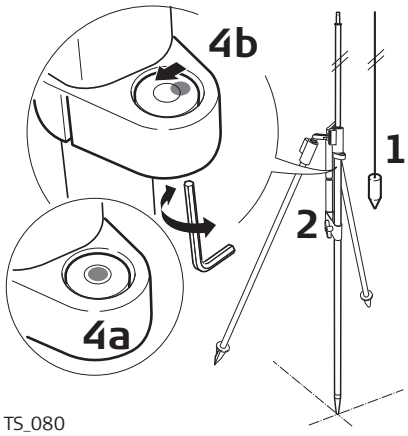

TS_080

☞ After the adjustments, all adjusting screws must have the same tightening tension and no adjusting screw should be loose.

## 5.6 Inspecting the Laser Plummet of the Instrument

☞ The laser plummet is located in the vertical axis of the instrument. Under normal conditions of use, the laser plummet does not need adjusting. If an adjustment is necessary due to external influences, return the instrument to any Leica Geosystems authorised service workshop.

**Inspecting the laser plummet step-by-step**

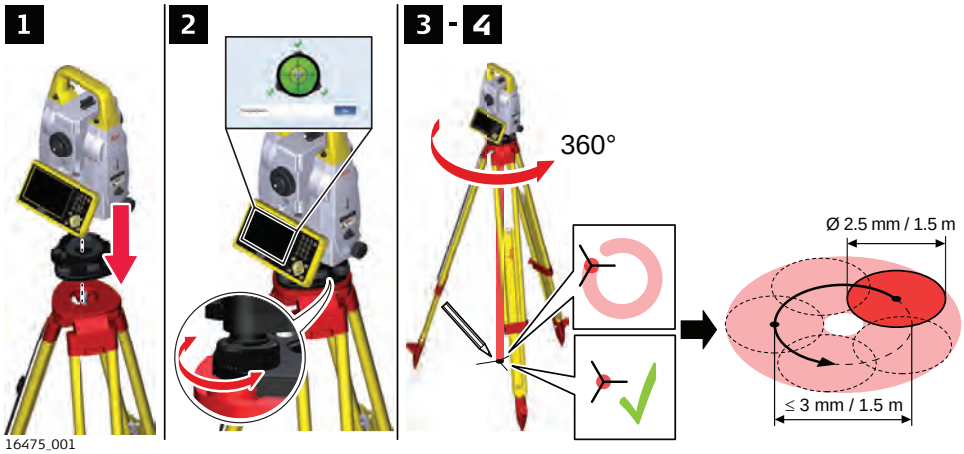

16475_001

The following table explains the most common settings.

1. Place and secure the instrument into the tribrach and onto a tripod.
2. Turn on the instrument. Using the tribrach footscrews, level the instrument with the electronic level.

☞ Electronic level:
- Select **Devices** from the Home Menu.
- Tap the arrow button to the right of the device name.
- To display the electronic level, tap **Compensator**.

3. *The laser plummet is switched on when the Compensator screen is displayed.*

☞ Inspection of the laser plummet should be carried out on a bright, smooth and horizontal surface, such as a sheet of paper.

Mark the centre of the red laser dot on the ground.

4. Turn the instrument slowly through 360°, carefully observing the movement of the red laser dot.

☞ The maximum diameter of the circular movement described by the centre of the laser dot should not exceed 3mm at a height of 1.5m.

If the centre of the laser dot describes a perceptible circular movement, or moves more than 3 mm away from the point which was first marked, an adjustment may be required. Inform your nearest Leica Geosystems authorised service centre. Depending on brightness and surface, the diameter of the laser dot can vary. At 1.5 m, it is about 2.5 mm.

## 5.7 Servicing the Tripod

**Servicing the tripod step-by-step**

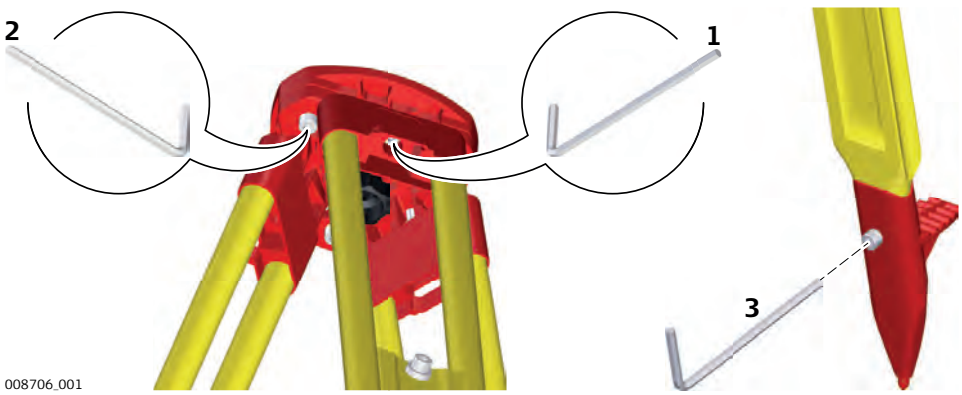


The following table explains the most common settings.

☞ The connections between metal and timber components must always be firm and tight.

| | |
|---|---|
| 1. | Tighten the leg cap screws moderately, with the supplied Allen key. |
| 2. | Tighten the articulated joints on the tripod head enough to keep the tripod legs open when lifting the tripod off the ground. |
| 3. | Tighten the Allen screws of the tripod legs. |

# 6 TPS Specific Functionality within iCON site/ iCON build

## 6.1 MC Application

**Map Screen elements**

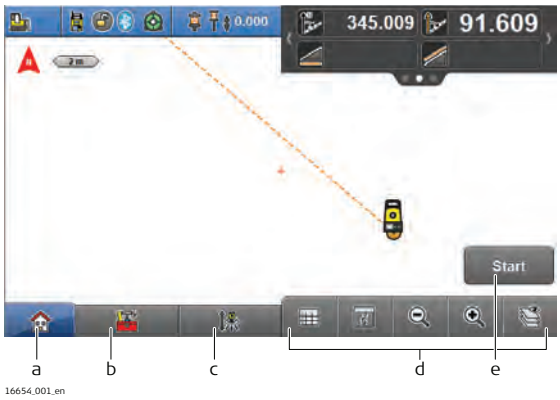


a Home key
b Toolbox
c Setup
d Map handler
e Measure bar


Select **MC Tools** from the Map Screen.

**MC Tools elements**

| Element | Description |
|---|---|
|  | Wizard to measure the dimensions of a paving machine. |
|  | To disconnect the TPS from the machine and make the TPS available for other workflows. |

## 6.2 Settings

**Communication settings**

Select **Com** from the Home Menu.


Set the communication channel. Select between **Cable**, **Internal Bluetooth** or **CCD6**.

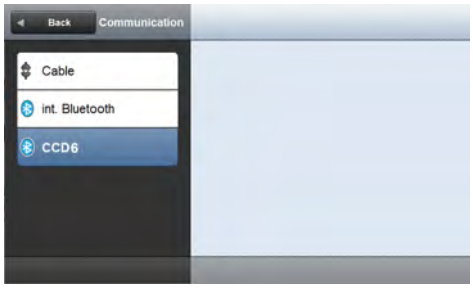

## Sensor settings

Select **Sensor** from the Home Menu.


Configure the settings for **Level/ Compensator**, **Sensor Calibration**, **Atmospheric Corrections** and **Reset Sensor**

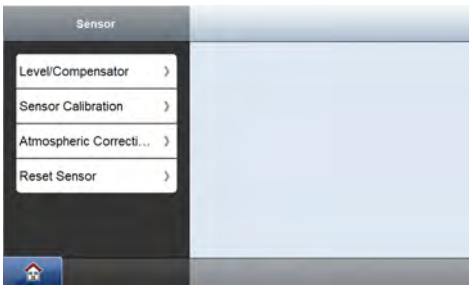


## Brightness Settings

Select **System** from the Home Menu.


In the **System** screen, select **Brightness**

- Set the brightness level to the desired value by pressing the plus/minus button.
- To set the brightness settings back to default, press the default button. 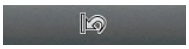
- To activate or deactivate the **Key illumination**, tap **On**/**Off**.

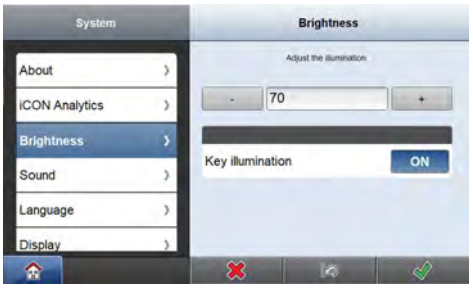

# 7 Care and Transport

## 7.1 Transport

**Transport in the field**

When transporting the equipment in the field, always make sure that you

- either carry the product in its original container,
- or carry the tripod with its legs splayed across your shoulder, keeping the attached product upright.

**Transport in a road vehicle**

Never carry the product loose in a road vehicle, as it can be affected by shock and vibration. Always carry the product in its container and secure it.

For products for which no container is available use the original packaging or its equivalent.

**Shipping**

When transporting the product by rail, air or sea, always use the complete original Leica Geosystems packaging, container and cardboard box, or its equivalent, to protect against shock and vibration.

**Shipping, transport of batteries**

When transporting or shipping batteries, the person responsible for the product must ensure that the applicable national and international rules and regulations are observed. Before transportation or shipping, contact your local passenger or freight transport company.

**Field adjustment**

Exposing the product to high mechanical forces, for example through frequent transport or rough handling, or storing the product for a long time may cause deviations and a decrease in the measurement accuracy. Periodically carry out test measurements and perform the field adjustments indicated in the User Manual before using the product.

## 7.2 Storage

**Product**

Respect the temperature limits when storing the equipment, particularly in summer if the equipment is inside a vehicle. Refer to "8 Technical Data" for information about temperature limits.

**Li-Ion batteries**

- Refer to "8 Technical Data" for information about storage temperature range.
- Remove batteries from the product and the charger before storing.
- After storage recharge batteries before using.
- Protect batteries from damp and wetness. Wet or damp batteries must be dried before storing or use.
- A storage temperature range of 0 °C to +30 °C / +32 °F to +86 °F in a dry environment is recommended to minimize self-discharging of the battery.
- At the recommended storage temperature range, batteries containing a 40% to 50% charge can be stored for up to one year. After this storage period the batteries must be recharged.

## 7.3 Cleaning and Drying

**Product and accessories**

- Blow dust off lenses and prisms.
- Never touch the glass with your fingers.
- Use only a clean, soft, lint-free cloth for cleaning. If necessary, moisten the cloth with water or pure alcohol. Do not use other liquids; these may attack the polymer components.

**Fogging of prisms**

Prisms that are cooler than the ambient temperature tend to fog. It is not enough simply to wipe them. Keep them for some time inside your jacket or in the vehicle to allow them to adjust to the ambient temperature.

**Damp products**

Dry the product, the transport container, the foam inserts and the accessories at a temperature not greater than 40°C /104°F and clean them. Remove the battery cover and dry the battery compartment. Do not repack until everything is completely dry. Always close the transport container when using in the field.

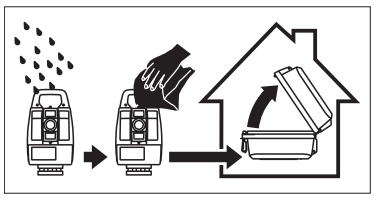

**Cables and plugs**

Keep plugs clean and dry. Blow away any dirt lodged in the plugs of the connecting cables.

## 7.4 Maintenance

☞

An inspection of the motorisation in motorised instruments must be done in a Leica Geosystems authorised service centre. Leica Geosystems recommends an inspection of the product every 12 months.

For instruments which are in intensive or permanent use, for example tunnelling or monitoring, the recommended inspection cycle may be reduced.

# 8 Technical Data

## 8.1 Angle Measurement

**Accuracy**

| Available angular accuracies | Standard deviation Hz, V ISO 17123-3 | Display resolution | | |
|---|---|---|---|---|
| ["] | [mgon] | ["] | [°] | [mgon] |
| 1 | 0.3 | 1 | 0.0001 | 0.1 |
| 2 | 0.6 | 1 | 0.0001 | 0.1 |
| 5 | 1.5 | 1 | 0.0001 | 0.1 |

**Characteristics**

Absolute, continuous, diametric.

## 8.2 Distance Measurement with Reflectors

**Range**

| Reflector | Range A | | Range B | | Range C | |
|---|---|---|---|---|---|---|
| | [m] | [ft] | [m] | [ft] | [m] | [ft] |
| Standard prism (GPR1) | 1800 | 6000 | 3000 | 10000 | 3500 | 12000 |
| Three standard prisms (GPR1) | 2300 | 7500 | 4500 | 14700 | 5400 | 17700 |
| 360° prism (GRZ4, GRZ122) | 800 | 2600 | 1500 | 5000 | 2000 | 7000 |
| 360° mini prism (GRZ101) | 450 | 1500 | 800 | 2600 | 1000 | 3300 |
| Mini prism (GMP101) | 800 | 2600 | 1200 | 4000 | 2000 | 7000 |
| Reflector tape GZM31) 60 mm × 60 mm | 150 | 500 | 250 | 800 | 250 | 800 |
| Machine Automation power prism (MPR122) | 800 | 2600 | 1500 | 5000 | 2000 | 7000 |
| Shortest measuring distance: | | | 1.5 m | | | |

**Atmospheric conditions**

| Range | Description |
|---|---|
| A | Strong haze, visibility 5 km; or strong sunlight, severe heat shimmer |
| B | Light haze, visibility about 20 km; or moderate sunlight, slight heat shimmer |
| C | Overcast, no haze, visibility about 40 km; no heat shimmer |

☞ Measurements can be made to reflector tapes over the entire range without external ancillary optics.

**Accuracy**

Accuracy refers to measurements to standard prisms.

| Distance measuring mode | Standard deviation ISO 17123-4, standard prism | Standard deviation ISO 17123-4, tape | Measurement time, typical [s] |
|---|---|---|---|
| **Single Auto** | 1 mm + 1.5 ppm | 3 mm + 2 ppm | 2.4 |
| **Continuous with lock** | 3 mm + 1.5 ppm | 3 mm + 2 ppm | < 0.15 |

Beam interruptions, severe heat shimmer and moving objects within the beam path can result in deviations of the specified accuracy.

The display resolution is 0.1 mm.

**Characteristics**

| Type | Description |
|---|---|
| Principle | Phase measurement |
| Type | Coaxial, visible red laser |
| Carrier wave | 658 nm |
| Measuring system | System Analyzer Basis 100–150 MHz |

## 8.3 Distance Measurement without Reflectors

**Range**

**R1000**

| Kodak Gray Card | Range D | | Range E | | Range F | |
|---|---|---|---|---|---|---|
| | [m] | [ft] | [m] | [ft] | [m] | [ft] |
| White side, 90% reflective | 800 | 2630 | 1000 | 3280 | > 1000 | > 3280 |
| Grey side, 18% reflective | 400 | 1320 | 500 | 1640 | > 500 | > 1640 |

Range of measurement: 1.5–1200 m

☞ R30 is able to achieve a range of 30 m/100 ft under all atmospheric conditions.

Display unambiguous: up to 1200 m

**Atmospheric conditions**

| Range | Description |
|---|---|
| D | Object in strong sunlight, severe heat shimmer |
| E | Object in shade, or overcast |
| F | Underground, night and twilight |

**Accuracy**

| Standard measuring [m] | Standard deviation [mm] ISO 17123-4 | Measure time, typical [s] | Measure time, maximum [s] |
|---|---|---|---|
| 0–500 | 2 + 2 ppm | 3–6 | 12 |

| Standard measuring [m] | Standard deviation [mm] ISO 17123-4 | Measure time, typical [s] | Measure time, maximum [s] |
|---|---|---|---|
| > 500 | 4 + 2 ppm | 3–6 | 12 |

Object in shade, sky overcast. Beam interruptions, severe heat shimmer and moving objects within the beam path can result in deviations of the specified accuracy.

The display resolution is 0.1 mm.

**Characteristics**

| Type | Description |
|---|---|
| Type | Coaxial, visible red laser |
| Carrier wave | 658 nm |
| Measuring system | System Analyzer Basis 100–150 MHz |

**Laser dot size**

| Distance [m] | Laser dot size, approximately [mm] |
|---|---|
| at 30 | 7 × 10 |
| at 50 | 8 × 20 |
| at 100 | 16 × 25 |

## 8.4 Automatic Target Aiming (ATRplus)

**Range of target aiming/ target locking**

| Reflector | Range (Target Aiming) | | Range (Target Locking) | |
|---|---|---|---|---|
| | [m] | [ft] | [m] | [ft] |
| Standard prism (GPR1) | 1500 | 6000 | 1000 | 3300 |
| 360° prism GRZ4, GRZ122) | 1000 | 3250 | 1000 | 3300 |
| 360° mini prism (GRZ101) | 450 | 1500 | 250 | 830 |
| Mini prism (GMP101) | 900 | 2880 | 600 | 2000 |
| Reflector tape 60 mm × 60 mm | 55 | 190 | not qualified | |
| Machine Automation power prism (MPR122) | 750 | 2500 | 650 | 2200 |

☞ The maximum range can be restricted by poorer conditions, for example rain.

| | |
|---|---|
| Shortest measuring distance: 360° prism (target aiming): | 1.5 m |
| Shortest measuring distance: 360° prism (target locking): | 5 m |

**ATRplus accuracy with the GPR1 prism**

| Type | Accuracy |
|---|---|
| ATRplus angle accuracy Hz, V (std. dev. ISO 17123-3) | 1" (0.3 mgon) |

**Maximum prism speed**

| | Direction of prism movement | |
|---|---|---|
| | Tangential | Radial |
| Prism Lock only | 14 m/s at 20 m | 25 m/s |
| Prism Lock with Measure Mode **Continuous with lock** | 6 m/s at 20 m | 6 m/s |

☞ A tangential movement means the prism is passing by the instrument at the specified distance.
A radial movement means the prism is moving away from or towards the instrument in the line of sight direction.

**Searching**

| Type | Value |
|---|---|
| Typical search time in field of view | 1.5 s |
| Field of view | 1°25′/1.55 gon |
| Definable search windows | Yes |

**Characteristics**

| Type | Description |
|---|---|
| Principle | Digital image processing |
| Type | Infrared laser |

## 8.5 PowerSearch

**Range**

| Reflector | Range | |
|---|---|---|
| | [m] | [ft] |
| Standard prism (GPR1) | 300 | 1000 |
| 360° prism (GRZ4, GRZ122) | 300* | 1000* |
| 360° mini prism (GRZ101) | Not recommended | |
| Mini prism (GMP101) | 100 | 330 |

Measurements at the vertical limits of the fan or under unfavourable atmospheric conditions may reduce the maximum range. (*optimally aligned to the instrument)

Shortest measuring distance: 1.5 m

**Searching**

| Type | Value |
|---|---|
| Typical search time | 5 s |
| Default search area | Hz: 400 gon, V: 40 gon |

| Type | Value |
|---|---|
| Definable search windows | Yes |

**Characteristics**

| Type | Description |
|---|---|
| Principle | Digital signal processing |
| Type | Infrared laser |

## 8.6 LOC8 Theft Deterrence and Location Device (optional)

**Internal battery**

| Battery | Voltage | Capacity |
|---|---|---|
| Li-Ion | 800 mAh<br>Recharged by the total station battery when instrument is switched on | Up to 3 days<br>Depending on mode of operation and cellular network conditions |

**Tracking period**

Update rate up to 1 minute

**Interfaces**

Wi-Fi: 802.11 b/g/n

**Environmental specifications**

**Temperature**

| Operating temperature [°C] | Storage temperature [°C] |
|---|---|
| −20 to +60 | −20 to +60 |

## 8.7 Conformity to National Regulations

### 8.7.1 iCR80

**Conformity to national regulations**

- FCC Part 15 (applicable in US)
- Hereby, Leica Geosystems AG declares that the radio equipment type iCR80 is in compliance with Directive 2014/53/EU and other applicable European Directives.
  The full text of the EU declaration of conformity is available at the following Internet address: http://www.leica-geosystems.com/ce.

  Class 1 equipment according to European Directive 2014/53/EU (RED) can be placed on the market and be put into service without restrictions in any EEA member state.
- The conformity for countries with other national regulations not covered by the FCC part 15 or European Directive 2014/53/EU has to be approved prior to use and operation.
- Japanese Radio Law and Japanese Telecommunications Business Law Compliance.
  - This device is granted pursuant to the Japanese Radio Law (電波法) and the Japanese Telecommunications Business Law (電気通信事業法).
  - This device should not be modified (otherwise the granted designation number will become invalid).

**Frequency band**

| Type | Frequency Band [MHz] |
|---|---|
| Bluetooth | 2402–2480 |
| WLAN | 2400–2473, channel 1–11 |

**Output power**

| Type | Output Power [mW] |
|---|---|
| Bluetooth | <10 |
| WLAN (802.11b) | 50 |
| WLAN (802.11g) | 32 |

**Antenna**

| Type | Bluetooth | WLAN |
|---|---|---|
| Antenna | Integrated antenna | Integrated antenna |
| Gain [dBi] | 0 | 0 |
| Connector | – | – |
| Frequency band [MHz] | 2400–2500 | 2400–2500 |

## 8.7.2 CommunicationHandle

**Conformity to national regulations**

- FCC Part 15 (applicable in US)
- Hereby, Leica Geosystems AG declares that the radio equipment type CCD6/RH16/RH17 is in compliance with Directive 2014/53/EU and other applicable European Directives.
  The full text of the EU declaration of conformity is available at the following internet address: http://www.leica-geosystems.com/ce.

  Class 1 equipment according to European Directive 2014/53/EU (RED) can be placed on the market and be put into service without restrictions in any EEA member state.
- The conformity for countries with other national regulations not covered by the FCC part 15 or European Directive 2014/53/EU has to be approved prior to use and operation.
- Japanese Radio Law and Japanese Telecommunications Business Law Compliance.
  - This device is granted pursuant to the Japanese Radio Law (電波法) and the Japanese Telecommunications Business Law (電気通信事業法).
  - This device should not be modified (otherwise the granted designation number will become invalid).

**Frequency band**

| Type | Frequency Band [MHz] |
|---|---|
| CCD6 | Limited to 2402–2480 |
| RH16 | Limited to 2402–2480 |
| RH17 | Limited to 2402–2480 |

**Output power**

| Value |
|---|
| < 100 mW (e. i. r. p.) |

**Antenna**

| Type | λ/2 dipole antenna |
|---|---|
| Gain [dBi] | 2 |

| Type | λ/2 dipole antenna |
|---|---|
| Connector | Special customized SMB |

## 8.7.3 LOC8 Theft Deterrence and Location Device (optional)

**Conformity to national regulations**

- FCC Part 15, 22 and 24 (applicable in US)
- Hereby, Leica Geosystems AG declares that the radio equipment type LOC8 is in compliance with Directive 2014/53/EU and other applicable European Directives.
  The full text of the EU declaration of conformity is available at the following Internet address: http://www.leica-geosystems.com/ce.

  Class 1 equipment according to European Directive 2014/53/EU (RED) can be placed on the market and be put into service without restrictions in any EEA member state.
- The conformity for countries with other national regulations not covered by the FCC part 15, 22 and 24 or European Directive 2014/53/EU has to be approved prior to use and operation.
- Japanese Radio Law and Japanese Telecommunications Business Law Compliance.
  - This device is granted pursuant to the Japanese Radio Law (電波法) and the Japanese Telecommunications Business Law (電気通信事業法).
  - This device should not be modified (otherwise the granted designation number will become invalid).

**Specific Absorption Rate (SAR)**

The product meets the limits for the maximum permissible exposure of the guide-lines and standards which are force in this respect. The product must be used with the recommended antenna. A separation distance of at least 20 centimetres should be kept between the antenna and the body of the user or nearby person within the intended application.

**Frequency band**

| Type | Value |
|---|---|
| GSM | GSM 900: 880 - 960 MHz<br>GSM 1800: 1710 - 1880 MHz |
| WCDMA | WCDMA 900: 880 - 960 MHz<br>WCDMA 2100: 1920 - 2170 MHz |
| WLAN | 2.4G Wi-Fi<br>802.11 b/g/n (20 MHz): 2412 - 2472 MHz<br>802.11 n (40 MHz): 2422 ~ 2462 MHz |
| GPS | 1.57542 GHz |

**Output power**

| Type | Value |
|---|---|
| GSM | GPRS:<br>Maximal power: 29,13 dBm |
| WCDMA | Maximal power: 23,58 dBm |

**Antenna**

| Type | Antenna | Gain |
|---|---|---|
| GSM | Internal PIFA antenna | GSM 900: 0.23 dBi<br>GSM 1800: 0.23 dBi |

| Type | Antenna | Gain |
|---|---|---|
| WCDMA | Internal antenna | WCDMA 900: 1.34 dB<br>WCDMA 1200: 1.34 dBi |
| GPS | Internal antenna | 0 dBi |
| WLAN | Internal PIFA antenna | –0.66 dBi |

## 8.7.4 Dangerous Goods Regulations

**Dangerous Goods Regulations**

Many products of Leica Geosystems are powered by Lithium batteries.

Lithium batteries can be dangerous under certain conditions and can pose a safety hazard. In certain conditions, Lithium batteries can overheat and ignite.

☞ When carrying or shipping your Leica product with Lithium batteries onboard a commercial aircraft, you must do so in accordance with the **IATA Dangerous Goods Regulations**.

☞ Leica Geosystems has developed **Guidelines** on "How to carry Leica products" and "How to ship Leica products" with Lithium batteries. Before any transportation of a Leica product, we ask you to consult these guidelines on our web page (http://www.leica-geosystems.com/dgr) to ensure that you are in accordance with the IATA Dangerous Goods Regulations and that the Leica products can be transported correctly.

☞ Damaged or defective batteries are prohibited from being carried or transported onboard any aircraft. Therefore, ensure that the condition of any battery is safe for transportation.

## 8.8 General Technical Data of the Product

**System accuracy**

Several factors can influence the accuracy of the system for determining the location of a prism:

- Internal ATRplus accuracy
- Angular accuracy of the instrument
- Type and centring accuracy of the prism
- Selected EDM measuring program
- External measuring conditions

Therefore, the overall pointing accuracy of the determined point location can be lower than the given angular accuracy and the ATRplus accuracy.

The following paragraphs provide a short overview of these influencing factors and their possible intensities.

### Angular accuracy

The accuracy of angular measurements depends on the instrument type. The angular accuracy for total stations is typically in the range from 0.5″ to 5″. The resulting error depends on the measurement distance.

| Angular accuracy | Possible deviation* at 100 m distance |
|---|---|
| 1″ | ~0.5 mm |
| 3″ | ~1.5 mm |

* Orthogonal to the line of sight.

☞ Refer to the data sheet of the respective instrument model for information about the angular accuracy.

### EDM accuracy

The distance measurement accuracy consists of two parts: a fixed value and a distance-dependent value (ppm-value).

Example: "Single measurements: 1 mm + 1.5 ppm"

The EDM accuracies for prism and reflectorless measurements can differ. Additionally, the accuracies can differ depending on the used technologies.

☞ Refer to the appropriate data sheet for information about the EDM accuracy.

### ATRplus accuracy

Automatic target aiming accuracies, like those of the ATRplus, are in general the same as the stated angular accuracy. Therefore these accuracies are also distance-dependent parameters.

External impacts, like heat shimmer, rain (prism surface covered by rain drops), fog, dust, strong background lights, dirty targets, alignment of the targets etc. can have a significant influence on the automated target. In addition, the selected EDM mode affects the ATRplus performance. Under good environmental conditions and with a clean, properly aligned target the accuracy of the automated target aiming is equivalent to the manual target aiming (presumed valid calibration values).

### Type and centring accuracy of the prism

The prism centring accuracy depends mainly on the used prism type, for example:

| Prism type | | Centring accuracy |
|---|---|---|
| Leica GPR1 | Circular prism | 1.0 mm |
| Leica GPH1P | Precision circular prism | 0.3 mm |
| Leica GRZ122 | 360° prism | 2.0 mm |
| Leica GRZ4 | 360° prism | 5.0 mm |

☞ Refer to the white paper "Leica Surveying Reflectors" for information about the different centring accuracies.

### More influencing factors

When determining absolute coordinates, the following parameters can also affect the resulting accuracy:

- Environmental conditions: temperature, air pressure and humidity
- Typical instrument errors, such as horizontal collimation error or index error.
- Proper functioning of laser plummet or optical plummet
- Correct horizontal levelling
- Setup of the target
- Quality of extra equipment, such as tribrach or tripod.

## Telescope

| Type | Value |
|---|---|
| Magnification | 30 × |
| Free Objective aperture | 40 mm |
| Focusing | 1.7 m/5.6 ft to infinity |

| Type | Value |
|---|---|
| Field of view | 1°30′/1.66 gon<br>2.7 m at 100 m |

**Compensator**

| Angular accuracy instrument ["] | Setting accuracy | | Setting range | |
|---|---|---|---|---|
| | ["] | [mgon] | [′] | [gon] |
| 1 | 0.5 | 0.2 | 4 | 0.07 |
| 2 | 0.5 | 0.2 | 4 | 0.07 |
| 5 | 1.5 | 0.5 | 4 | 0.07 |

**Level**

| Type | Value |
|---|---|
| Circular level sensitivity | 6′/2 mm |
| Electronic level resolution | 2" |

**Control unit**

| Type | Description |
|---|---|
| Display | WVGA (800 × 480 pixels), colour, graphics capable LCD, illumination, touch screen |
| Keyboard | 22 keys<br>Illumination |
| Angle display | 360°′", 360° decimal, 400 gon, H:V, V:H, V% |
| Distance display | m, ft int, ft us, ft int inch, ft us inch |
| Position | In both faces, face two is optional |
| Touch screen | Screen protection foil on glass |

**Instrument ports**

| Name | Description |
|---|---|
| Cable | • 5 pin LEMO-0 for power, communication, data transfer.<br>• This port is located at the base of the instrument. |
| CommunicationHandle | • Hotshoe connection for Communication-Handle.<br>• This port is located on top of Communication side cover. |
| Bluetooth | • Bluetooth module for communication.<br>• This port is housed within Communication side cover. |
| USB host port | • USB memory stick port for data transfer. |
| USB device port | • Cable connections from USB devices for communication and data transfer. |
| WLAN | • WLAN module for communication.<br>• This port is housed within the Communication side cover. |

**Pin assignments of the 5 pin LEMO-0 port**

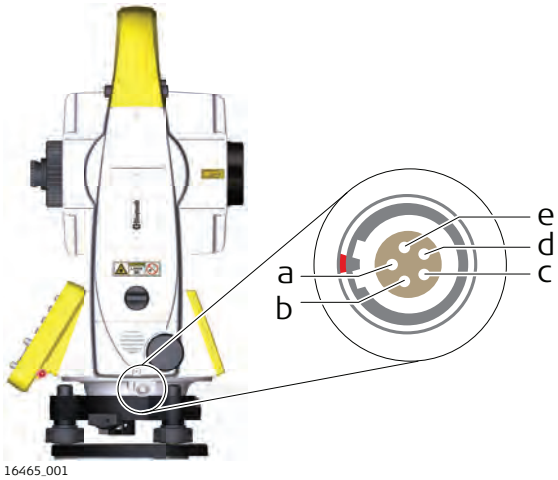


a Pin 1: Power input
b Pin 2: Not used
c Pin 3: Single ground
d Pin 4: RxD (RS232, receive data, In)
e Pin 5: TxD (RS232, transmit data, Out)

**Instrument dimensions**

**Without CCD6**

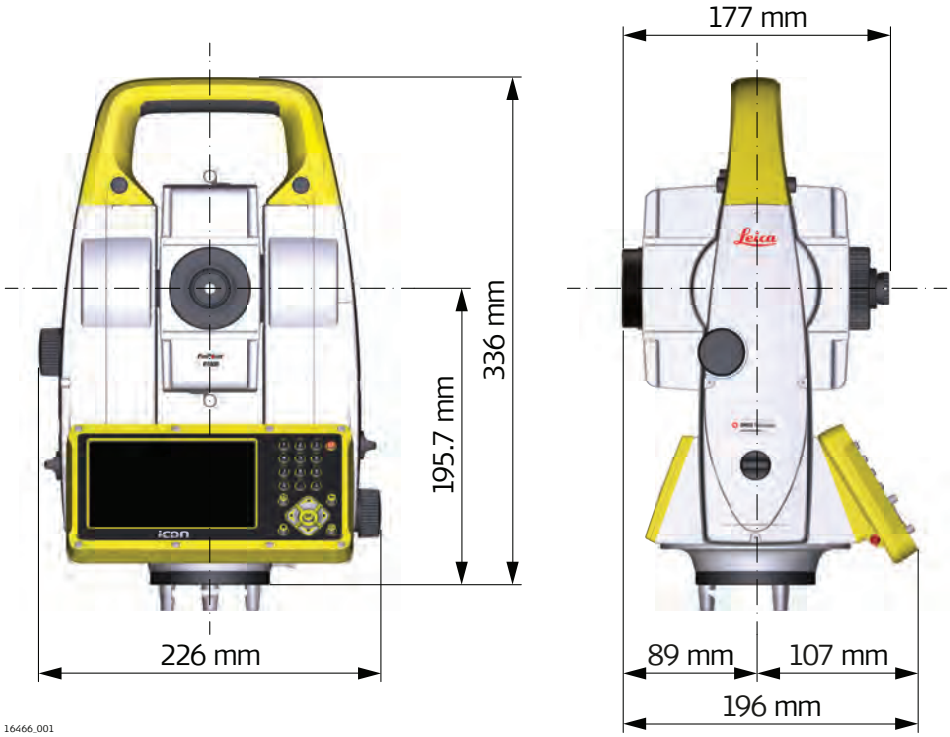

**With CCD6**

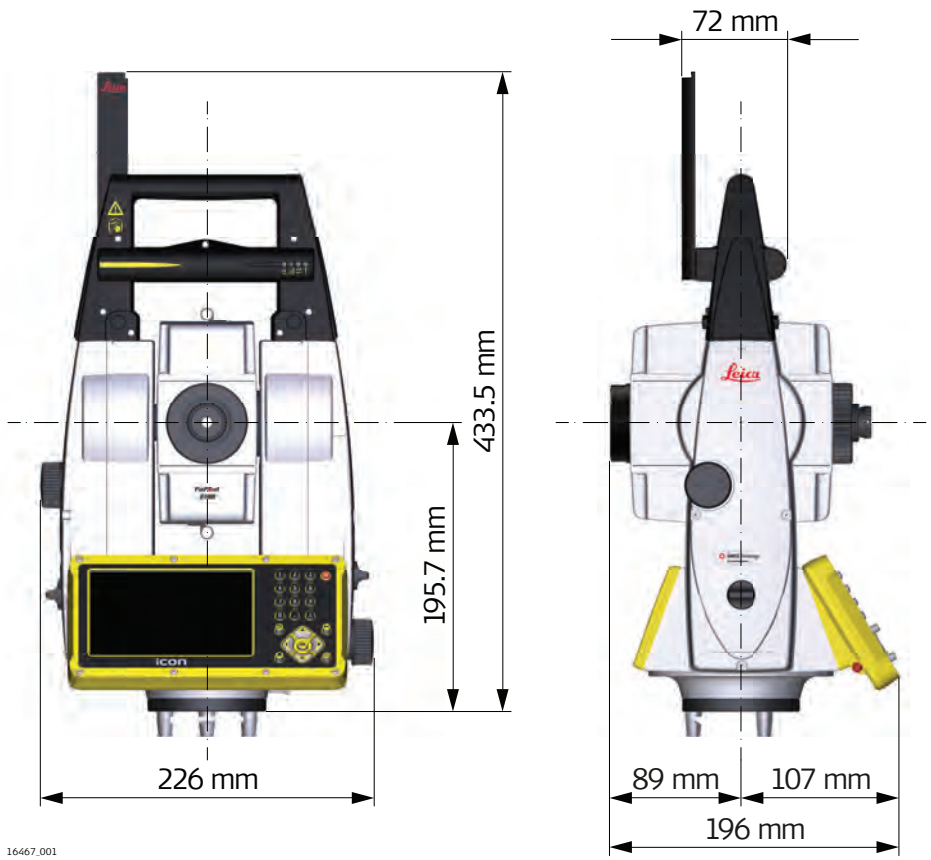


**Weight**

| | |
|---|---|
| Instrument (including battery): | 5.3 kg |
| Tribrach: | 0.8 kg |

**Recording**

Data can be recorded in the internal memory. Recorded data can be exported to an SD card or USB Stick.

| Type | Capacity [MB] | Number of measurements per MB |
|---|---|---|
| Internal memory | 2048 | 1750 |
| SD card | • 1024<br>• 8192 | 1750 |
| USB stick | 1024 | 1750 |

**Laser plummet**

| Type | Value |
|---|---|
| Type | Visible red laser class 2 |
| Location | In standing axis of instrument |
| Accuracy | Deviation from plumb line: 1.5 mm (2 sigma) at 1.5 m instrument height |
| Diameter of laser point | 2.5 mm at 1.5 m instrument height |

**Drives**

| Description |
|---|
| Endless horizontal and vertical drives |

**Motorisation**

| Type | Description |
|---|---|
| Maximum rotating speed | 50 gon/s |

**Power**

| Type | Description |
|---|---|
| External supply voltage | Nominal voltage 12.8 V DC, Range 11.5 V-13.5 V |

**Internal battery**

| Type | Battery | Voltage | Capacity |
|---|---|---|---|
| GEB222 | Li-Ion | 7.4 V | 6.0 Ah |

**External battery**

| Type | Battery | Voltage | Capacity |
|---|---|---|---|
| GEB371 | Li-Ion | 13 V | 16.8 Ah |

**Environmental specifications**

**Temperature**

| Type | Operating temperature [°C] | Storage temperature [°C] |
|---|---|---|
| All instruments | –20 to +50 | –40 to +70 |
| Leica SD cards | –40 to +80 | –40 to +80 |
| Battery internal | –20 to +55 | –40 to +70 |

**Protection against water, dust and sand**

| Type | Protection |
|---|---|
| All instruments | IP55 (IEC 60529) |

**Humidity**

| Type | Protection |
|---|---|
| All instruments | Max 95% non condensing<br>The effects of condensation are to be effectively counteracted by periodically drying out the instrument. |

**Reflectors**

| Type | Additive Constant [mm] | ATRplus | PS |
|---|---|---|---|
| Standard prism, GPR1 | 0.0 | yes | yes |
| Mini prism, GMP101 | +17.5 | yes | yes |
| 360° prism, GRZ4 / GRZ122 | +23.1 | yes | yes |
| 360° mini prism, GRZ101 | +30.0 | yes | not recommended |

| Type | Additive Constant [mm] | ATRplus | PS |
|---|---|---|---|
| Reflector tape S, M, L | +34.4 | yes | no |
| Reflectorless | +34.4 | no | no |
| Machine Automation power prism, MPR122 | +28.1 | yes | yes |

There are no special prisms required for ATRplus or for PS.

**Electronic Guide Light (EGL)**

Working range: 5 m to 150 m (15 ft to 500 ft)
Position accuracy: 5 cm at 100 m (1.97" at 330 ft)

**Automatic corrections**

The following automatic corrections are made:

- Line of sight error
- Tilting axis error
- Earth curvature
- Circle eccentricity
- Compensator index error
- Vertical index error
- Standing axis tilt
- Refraction
- ATRplus zero point error

## 8.9 Scale Correction

**Use of scale correction**

By entering a scale correction, reductions proportional to distance can be taken into account.

- Atmospheric correction.
- Reduction to mean sea level.
- Projection distortion.

**Atmospheric correction ΔD1**

The slope distance displayed is correct if the scale correction in ppm, mm/km, which has been entered corresponds to the atmospheric conditions prevailing at the time of the measurement.

The atmospheric correction includes:

- Adjustments for air pressure
- Air temperature
- Relative humidity

For highest precision distance measurements, the atmospheric correction should be determined with an accuracy of 1 ppm. The following parameters must be redetermined:

- Air temperature to 1 °C
- Air pressure to 3 mbar
- Relative humidity to 20%

**Air humidity**

The air humidity influences the distance measurement if the climate is extremely hot and damp.

For high precision measurements, the relative humidity must be measured and entered along with the air pressure and the temperature.

**Air humidity correction**

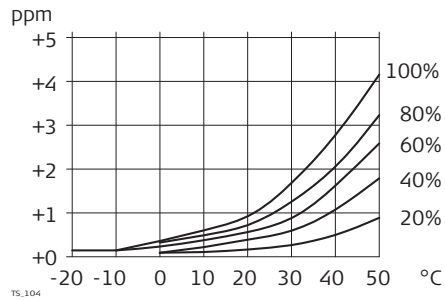


| | |
|---|---|
| ppm | Air humidity correction [mm/km] |
| % | Relative humidity [%] |
| °C | Air temperature [°C] |

**Index n**

| Type | Index n | Carrier wave [nm] |
|---|---|---|
| Combined EDM | 1.0002863 | 658 |

The index n is calculated from the formula of the IAG Resolutions (1999), and is valid for:

| | |
|---|---|
| Air pressure p: | 1013.25 mbar |
| Air temperature t: | 12 °C |
| Relative air humidity h: | 60% |

**Formulas**

Formula for visible red laser

$$\Delta D_1 = 286.338 - \left[ \frac{0.29535 \cdot p}{(1 + \alpha \cdot t)} - \frac{4.126 \cdot 10^{-4} \cdot h}{(1 + \alpha \cdot t)} \cdot 10^{x} \right]$$

002419_002

| | |
|---|---|
| $\Delta D_1$ | Atmospheric correction [ppm] |
| p | Air pressure [mbar] |
| t | Air temperature [°C] |
| h | Relative humidity [%] |
| $\alpha$ | $\frac{1}{273.15}$ |
| x | (7.5 * t/(237.3 + t)) + 0.7857 |

If the basic value of 60 % relative humidity as used by the EDM is retained, the maximum possible error in the calculated atmospheric correction is 2 ppm, 2 mm/km.

**Reduction to mean sea level $\Delta D_2$**

The values for $\Delta D_2$ are always negative and are derived from the following formula:

$$\Delta D_2 = - \frac{H}{R} \cdot 10^6$$

TS_106

| | |
|---|---|
| $\Delta D_2$ | Reduction to mean sea level [ppm] |
| H | Height of EDM above sea level [m] |
| R | $6.378 * 10^6$ m |

**Projection distortion $\Delta D_3$**

The magnitude of the projection distortion is in accordance with the projection system used in a particular country, for which official tables are generally

available. The following formula is valid for cylindrical projections such as that of Gauss-Krüger:

$$\Delta D_3 = \frac{X^2}{2R^2} \cdot 10^6$$

TS_107

| | |
|---|---|
| $\Delta D_3$ | Projection distortion [ppm] |
| X | Easting, distance from projection zero line with the scale factor 1 [km] |
| R | $6.378 * 10^6$ m |

In countries where the scale factor is not unity, this formula cannot be directly applied.

**Atmospheric corrections °C**

Atmospheric corrections in ppm with temperature [°C], air pressure [mb] and height [m] at 60% relative humidity.

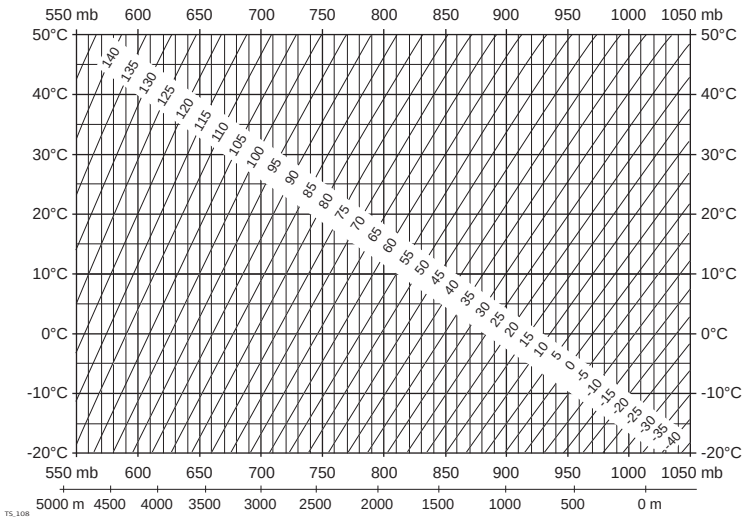


**Atmospheric corrections °F**

Atmospheric corrections in ppm with temperature [°F], air pressure [inch Hg] and height [ft] at 60% relative humidity.

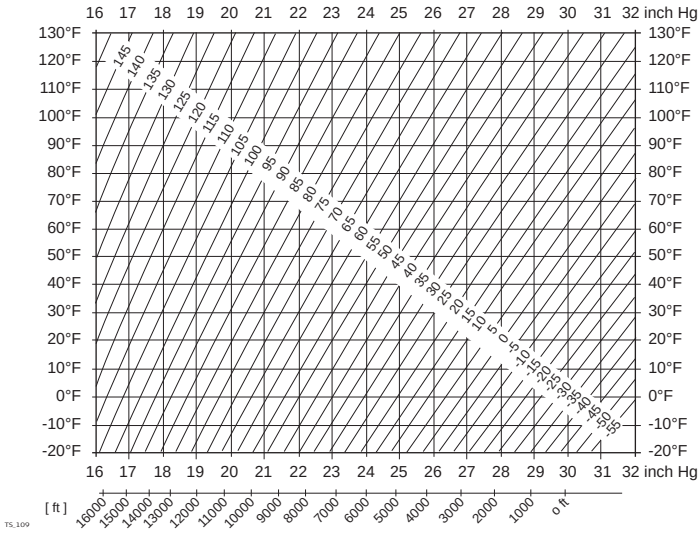

**Formulas**

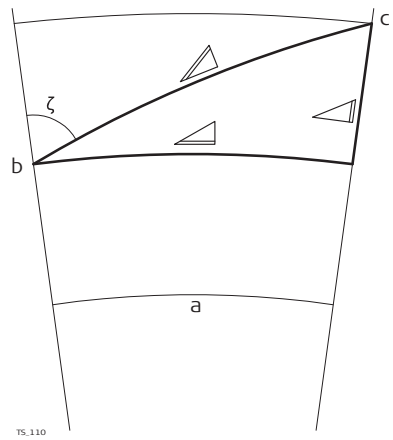


a Mean Sea Level
b Instrument
c Reflector

◿ Slope distance
◿ Horizontal distance
◿ Height difference

The instrument calculates the slope distance, horizontal distance, height difference in accordance with the following formulas:

$$◿ = D_0 \cdot ( 1 + ppm \cdot 10^{-6} ) + AC$$

002425_002

| | |
|---|---|
| ◿ | Displayed slope distance [m] |
| $D_0$ | Uncorrected distance [m] |
| ppm | Atmospheric scale correction [mm/km] |
| AC | Additive constant of the reflector [m] |

$$◿ = Y - A \cdot X \cdot Y$$

TS_112

$$◿ = X + B \cdot Y^2$$

TS_113

| | |
|---|---|
| ◿ | Horizontal distance [m] |
| ◿ | Height difference [m] |
| Y | ◿ * \|sinζ\| |
| X | ◿ * cosζ |
| ζ | Vertical circle reading |
| A | $(1 - k / 2) / R = 1.47 * 10^{-7}$ [$m^{-1}$] |
| B | $(1 - k) / (2 * R) = 6.83 * 10^{-8}$ [$m^{-1}$] |
| k | 0.13 (mean refraction coefficient) |
| R | $6.378 * 10^6$ m (radius of the earth) |

Earth curvature (1/R) and mean refraction coefficient (k) are automatically taken into account when calculating the horizontal distance and height difference. The calculated horizontal distance relates to the station height and not to the reflector height.

**Reflector types**

The reduction formulas are valid for measurements to all reflector types:

- To prisms
- To reflector tape
- Reflectorless measurements

## Formulas

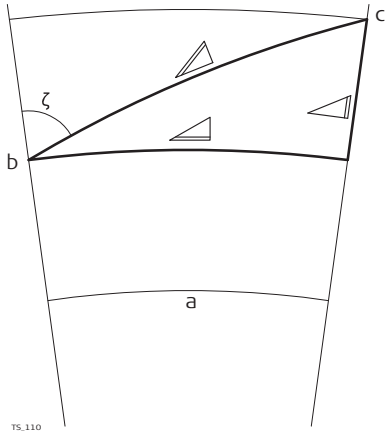


a Mean Sea Level
b Instrument
c Reflector

◿ Slope distance
◿ Horizontal distance
◿ Height difference

The instrument calculates the slope distance, horizontal distance, height difference in accordance with the following formulas:

$$◿ = D_0 \cdot ( 1 + ppm \cdot 10^{-6} ) + AC$$

002425_002

| | |
|---|---|
| ◿ | Displayed slope distance [m] |
| $D_0$ | Uncorrected distance [m] |
| ppm | Atmospheric scale correction [mm/km] |
| AC | Additive constant of the reflector [m] |

$$◿ = Y - A \cdot X \cdot Y$$

TS_112

$$◿ = X + B \cdot Y^2$$

TS_113

| | |
|---|---|
| ◿ | Horizontal distance [m] |
| ◿ | Height difference [m] |
| Y | ◿ * \|sinζ\| |
| X | ◿ * cosζ |
| ζ | Vertical circle reading |
| A | $(1 - k / 2) / R = 1.47 * 10^{-7}$ [$m^{-1}$] |
| B | $(1 - k) / (2 * R) = 6.83 * 10^{-8}$ [$m^{-1}$] |
| k | 0.13 (mean refraction coefficient) |
| R | $6.378 * 10^6$ m (radius of the earth) |

Earth curvature (1/R) and mean refraction coefficient (k) are automatically taken into account when calculating the horizontal distance and height difference. The calculated horizontal distance relates to the station height and not to the reflector height.

# 9 Software Licence Agreement

**Software Licence Agreement**

This product contains software that is preinstalled on the product, or that is supplied to you on a data carrier medium, or that can be downloaded by you online according to prior authorisation from Leica Geosystems. Such software is protected by copyright and other laws and its use is defined and regulated by the Leica Geosystems Software Licence Agreement, which covers aspects such as, but not limited to, Scope of the Licence, Warranty, Intellectual Property Rights, Limitation of Liability, Exclusion of other Assurances, Governing Law and Place of Jurisdiction. Please make sure, that at any time you fully comply with the terms and conditions of the Leica Geosystems Software Licence Agreement.

Such agreement is provided together with all products and can also be referred to and downloaded at the Leica Geosystems home page at http://leica-geosystems.com/about-us/compliance-standards/legal-documents or collected from your Leica Geosystems distributor.

You must not install or use the software unless you have read and accepted the terms and conditions of the Leica Geosystems Software Licence Agreement. Installation or use of the software or any part thereof, is deemed to be an acceptance of all the terms and conditions of such Licence Agreement. If you do not agree to all or some of the terms of such Licence Agreement, you must not download, install or use the software and you must return the unused software together with its accompanying documentation and the purchase receipt to the distributor from whom you purchased the product within ten (10) days of purchase to obtain a full refund of the purchase price.

**Open Source information**

The software on the product may contain copyright-protected software that is licenced under various open source licences.

Copies of the corresponding licences

- are provided together with the product (for example in the About panel of the software)
- can be downloaded on http://opensource.leica-geosystems.com

If foreseen in the corresponding open source licence, you may obtain the corresponding source code and other related data on http://opensource.leica-geosystems.com.

Contact opensource@leica-geosystems.com in case you need additional information.

**871949-2.0.0en**

Original text
Published in Switzerland


**Leica Geosystems AG**

Heinrich-Wild-Strasse
CH-9435 Heerbrugg
Switzerland
Phone +41 71 727 31 31

**www.leica-geosystems.com**

- when it has to be **right**