Leica CS10/CS15 & GS Sensors
User Manual

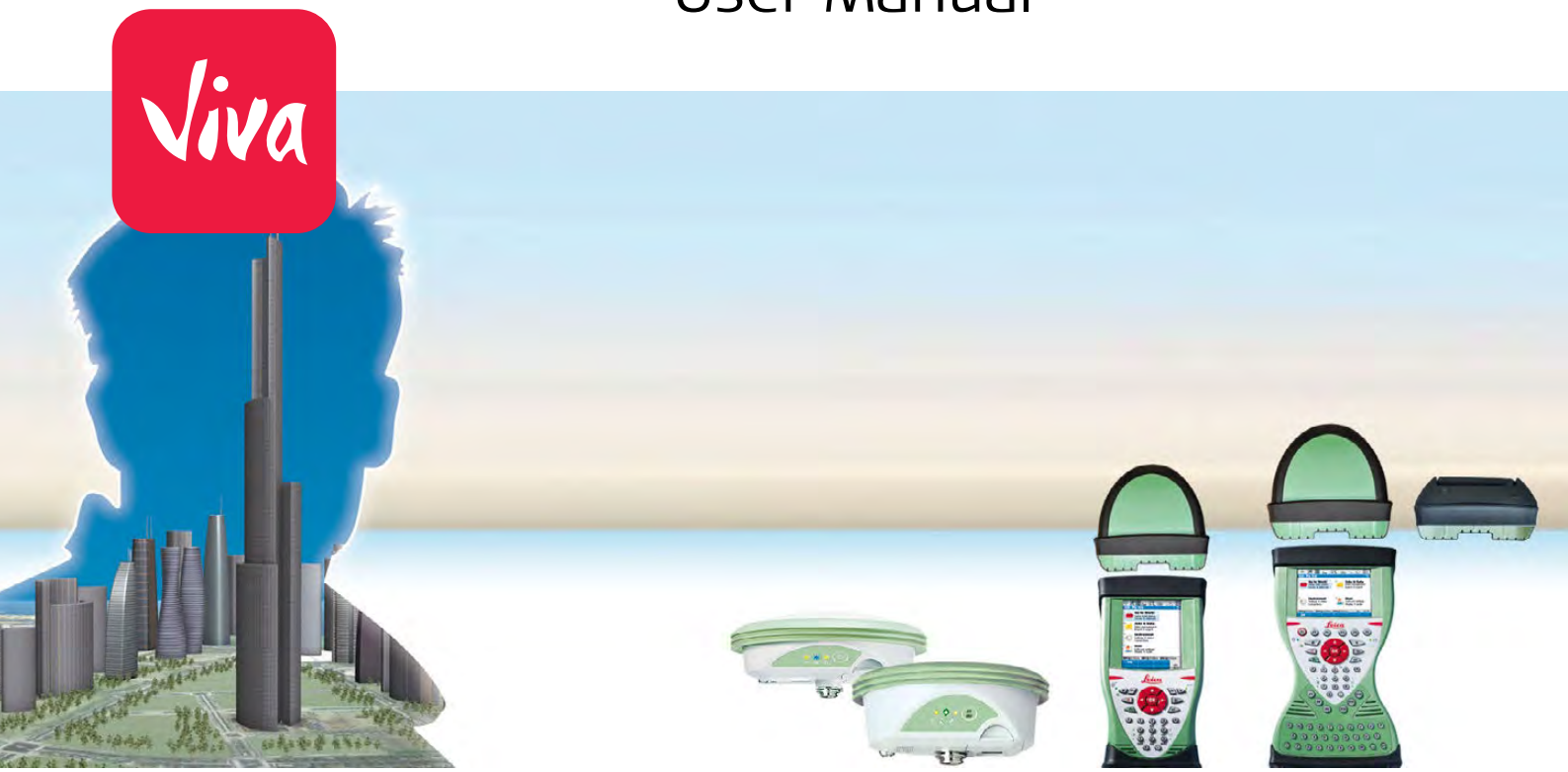

Version 8.0
English

- when it has to be **right**

Leica Geosystems

Introduction

Purchase

Congratulations on the purchase of a Leica SmartWorx Viva instrument.

This manual contains important safety directions as well as instructions for setting up the product and operating it. Refer to "1 Safety Directions" for further information. Read carefully through the User Manual before you switch on the product.

Product Identification

The model and serial number of your product are indicated on the type plate. Always refer to this information when you need to contact your agency or Leica Geosystems authorised service centre.

Trademarks

- Windows is a registered trademark of Microsoft Corporation in the United States and other countries
- *Bluetooth*® is a registered trademark of Bluetooth SIG, Inc.
- SD Logo is a trademark of SD-3C, LLC.

All other trademarks are the property of their respective owners.

Validity of this manual

This manual applies to the CS10/CS15, GS05/GS06, GS08plus/GS12 and CTR16/CTR17 instruments. Differences between the various models are marked and described.

Available documentation

Name	Description/Format		
CS10/CS15 & GS Sensors Quick Guide	Provides an overview of the product together with technical data and safety directions. Intended as a quick reference guide.	✓	✓
CS10/CS15 & GS Sensors User Manual	All instructions required in order to operate the product to a basic level are contained in the User Manual. Provides an overview of the product together with technical data and safety directions.	-	✓

Name	Description/Format		
Viva Series Technical Reference Manual	Overall comprehensive guide to the product and application functions. Included are detailed descriptions of special software/hardware settings and software/hardware functions intended for technical specialists.	-	✓

Refer to the following resources for all CS10/CS15 & GS Sensor documentation/software:

- the Leica USB documentation card
- https://myworld.leica-geosystems.com

myWorld@Leica Geosystems (**https://myworld.leica-geosystems.com**) offers a wide range of services, information and training material.

With direct access to myWorld, you are able to access all relevant services whenever it is convenient for you, 24 hours a day, 7 days per week. This increases your efficiency and keeps you and your equipment instantly updated with the latest information from Leica Geosystems.

Service	Description
myProducts	Add all products that you and your company own and explore your world of Leica Geosystems: View detailed information on your products and update your products with the latest software and keep up-to-date with the latest documentation.
myService	View the current service status and full service history of your products in Leica Geosystems service centres. Access detailed information on the services performed and download your latest calibration certificates and service reports.
mySupport	View the current service status and full service history of your products in Leica Geosystems service centres. Access detailed information on the services performed and download your latest calibration certificates and service reports.
myTraining	Enhance your product knowledge with Leica Geosystems Campus - Information, Knowledge, Training. Study the latest online training material on your products and register for seminars or courses in your country.
myTrusted-Services	Add your subscriptions and manage users for Leica Geosystems Trusted Services, the secure software services, that assist you to optimise your workflow and increase your efficiency.

Table of Contents

In this manual

Chapter			Page
1	**Safety Directions**		**6**
	1.1	General Introduction	6
	1.2	Definition of Use	7
	1.3	Limits of Use	7
	1.4	Responsibilities	8
	1.5	Hazards of Use	9
	1.6	Electromagnetic Compatibility EMC	13
	1.7	FCC Statement, Applicable in U.S.	14
2	**Description of the System**		**17**
	2.1	Overview	17
	2.2	Terminology	17
	2.3	System Concept	18
	2.3.1	Software Concept	18
	2.3.2	Power Concept	20
	2.3.3	Data Storage Concept	20
	2.4	Container Contents	21
	2.5	CS Components	24
	2.5.1	CS10	24
	2.5.2	CS15	25
	2.6	Docking Station Components	26
	2.7	GS08plus/GS12 Components	26
3	**User Interface**		**27**
	3.1	Keyboard	27
	3.2	Operating Principles	29
4	**Operation**		**30**
	4.1	Equipment Setup	30
	4.1.1	Setting up as a Post-Processing Base	30
	4.1.2	Setting up as a Real-Time Base	32
	4.1.3	Setting up as a Real-Time Rover	35
	4.1.4	Setting up Viva Uno	37
	4.1.5	Fixing the Field Controller to a Holder and Pole	39
	4.1.6	Fixing the Display Foil to the CS	40
	4.1.7	Fixing a Hand Strap to the CS	41
	4.1.8	Fixing the Slot Cover to the CS	41
	4.1.9	Inserting and Removing a SIM Card	42
	4.1.10	Setting up the Docking Station	42
	4.1.11	Setting up as Handheld GNSS	43
	4.1.12	Setting up as Robotic	43
	4.1.13	Connecting to a Personal Computer	44
	4.1.14	Enabling WiFi in WinCE	46
	4.2	Power Functions	46
	4.3	Batteries	47
	4.3.1	Operating Principles	47
	4.3.2	Changing the Battery	47
	4.3.3	Charging the Battery	48
	4.4	Working with the Memory Device	49
	4.5	LED Indicators on CS10/CS15	50

4.6 LED Indicators on CTR16/CTR17 51
4.7 LED Indicators on GS08plus/GS12 52

5 Care and Transport 53

5.1 Transport 53
5.2 Storage 53
5.3 Cleaning and Drying 54

6 Technical Data 55

6.1 CS10/CS15 Technical Data 55
6.2 GS05/GS06 Technical Data 57
6.2.1 Tracking Characteristics 57
6.2.2 Accuracy 57
6.2.3 Technical Data 58
6.3 CTR16/CTR17 Technical Data 59
6.4 GS08plus/GS12 60
6.4.1 Tracking Characteristics 60
6.4.2 Accuracy 61
6.4.3 Technical Data 62
6.5 Antennas Technical Data 64
6.6 Conformity to National Regulations 65
6.6.1 CS10 65
6.6.2 CS15 66
6.6.3 CTR16/CTR17 67
6.6.4 GS08plus 68
6.6.5 GS12 69

7 Software Licence Agreement 70

Appendix A Pin Assignments and Sockets 71

A.1 CS10/CS15 71
A.2 GS08plus 72

1 Safety Directions

1.1 General Introduction

Description

The following directions enable the person responsible for the product, and the person who actually uses the equipment, to anticipate and avoid operational hazards.

The person responsible for the product must ensure that all users understand these directions and adhere to them.

About Warning Messages

Warning messages are an essential part of the safety concept of the instrument. They appear wherever hazards or hazardous situations can occur.

Warning messages...

- make the user alert about direct and indirect hazards concerning the use of the product.
- contain general rules of behaviour.

For the users' safety, all safety instructions and safety messages shall be strictly observed and followed! Therefore, the manual must always be available to all persons performing any tasks described here.

DANGER, **WARNING**, **CAUTION** and **NOTICE** are standardised signal words for identifying levels of hazards and risks related to personal injury and property damage. For your safety, it is important to read and fully understand the following table with the different signal words and their definitions! Supplementary safety information symbols may be placed within a warning message as well as supplementary text.

Type	Description
⚠ **DANGER**	Indicates an imminently hazardous situation which, if not avoided, will result in death or serious injury.
⚠ **WARNING**	Indicates a potentially hazardous situation or an unintended use which, if not avoided, could result in death or serious injury.
⚠ **CAUTION**	Indicates a potentially hazardous situation or an unintended use which, if not avoided, may result in minor or moderate injury.
NOTICE	Indicates a potentially hazardous situation or an unintended use which, if not avoided, may result in appreciable material, financial and environmental damage.
☞	Important paragraphs which must be adhered to in practice as they enable the product to be used in a technically correct and efficient manner.

1.2 Definition of Use

Intended use

- Remote control of product.
- Data communication with external appliances.
- Recording measurements.
- Computing with software.
- Carrying out measurement tasks using various GNSS measuring techniques.
- Recording GNSS and point related data.
- Measuring raw data and computing coordinates using carrier phase and code signal from GNSS satellites.

Reasonably foreseeable misuse

- Use of the product without instruction.
- Use outside of the intended use and limits.
- Disabling safety systems.
- Removal of hazard notices.
- Opening the product using tools, for example screwdriver, unless this is permitted for certain functions.
- Modification or conversion of the product.
- Use after misappropriation.
- Use of products with recognizable damages or defects.
- Use with accessories from other manufacturers without the prior explicit approval of Leica Geosystems.
- Inadequate safeguards at the working site.
- Controlling of machines, moving objects or similar monitoring application without additional control and safety installations.

1.3 Limits of Use

Environment

Suitable for use in an atmosphere appropriate for permanent human habitation: not suitable for use in aggressive or explosive environments.

DANGER

Local safety authorities and safety experts must be contacted before working in hazardous areas, or close to electrical installations or similar situations by the person in charge of the product.

The following advice is only valid for battery charger, power adapter and car adapter.

Environment

Suitable for use in dry environments only and not under adverse conditions.

1.4 Responsibilities

Manufacturer of the product

Leica Geosystems AG, CH-9435 Heerbrugg, hereinafter referred to as Leica Geosystems, is responsible for supplying the product, including the user manual and original accessories, in a safe condition.

Person responsible for the product

The person responsible for the product has the following duties:

- To understand the safety instructions on the product and the instructions in the user manual.
- To ensure that it is used in accordance with the instructions.
- To be familiar with local regulations relating to safety and accident prevention.
- To inform Leica Geosystems immediately if the product and the application becomes unsafe.
- To ensure that the national laws, regulations and conditions for the operation of radio transmitters are respected.
- To ensure that the radio modem is not operated without the permission of the local authorities on frequencies and/or output power levels other than those specifically reserved and intended for use without a specific permit.
  The internal and external radio modems have been designed to operate on frequency ranges and output power ranges, the exact use of which differs from one region and/or country to another.

1.5 Hazards of Use

DANGER

Because of the risk of electrocution, it is dangerous to use poles, levelling staffs and extensions in the vicinity of electrical installations such as power cables or electrical railways.

Precautions:

Keep at a safe distance from electrical installations. If it is essential to work in this environment, first contact the safety authorities responsible for the electrical installations and follow their instructions.

WARNING

During dynamic applications, for example stakeout procedures there is a danger of accidents occurring if the user does not pay attention to the environmental conditions around, for example obstacles, excavations or traffic.

Precautions:

The person responsible for the product must make all users fully aware of the existing dangers.

WARNING

Inadequate securing of the working site can lead to dangerous situations, for example in traffic, on building sites and at industrial installations.

Precautions:

Always ensure that the working site is adequately secured. Adhere to the regulations governing safety, accident prevention and road traffic.

CAUTION

If the accessories used with the product are not properly secured and the product is subjected to mechanical shock, for example blows or falling, the product may be damaged or people can sustain injury.

Precautions:

When setting up the product, make sure that the accessories are correctly adapted, fitted, secured, and locked in position.

Avoid subjecting the product to mechanical stress.

WARNING

Incorrect fastening of the external antenna to vehicles or transporters poses the risk of the equipment being broken by mechanical influence, vibration or airstream. This may result in accident and physical injury.

Precautions:

Attach the external antenna professionally. The external antenna must be secured additionally, for example by use of a safety cord. Ensure that the mounting device is correctly mounted and able to carry the weight of the external antenna (>1 kg) safely.

WARNING

If the product is used with accessories, for example masts, staffs, poles, you may increase the risk of being struck by lightning.

Precautions:

Do not use the product in a thunderstorm.

DANGER

If the product is used with accessories, for example on masts, staffs, poles, you may increase the risk of being struck by lightning. Danger from high voltages also exists near power lines. Lightning, voltage peaks, or the touching of power lines can cause damage, injury and death.

Precautions:

- Do not use the product in a thunderstorm as you can increase the risk of being struck by lightning.
- Be sure to remain at a safe distance from electrical installations. Do not use the product directly under or close to power lines. If it is essential to work in such an environment contact the safety authorities responsible for electrical installations and follow their instructions.
- If the product has to be permanently mounted in an exposed location, it is advisable to provide a lightning conductor system. A suggestion on how to design a lightning conductor for the product is given below. Always follow the regulations in force in your country regarding grounding antennas and masts. These installations must be carried out by an authorised specialist.
- To prevent damages due to indirect lightning strikes (voltage spikes) cables, for example for antenna, power source or modem should be protected with appropriate protection elements, like a lightning arrester. These installations must be carried out by an authorised specialist.
- If there is a risk of a thunderstorm, or if the equipment is to remain unused and unattended for a long period, protect your product additionally by unplugging all systems components and disconnecting all connecting cables and supply cables, for example, instrument - antenna.

Lightning conductors

Suggestion for design of a lightning conductor for a GNSS system:

1) On non-metallic structures

   Protection by air terminals is recommended. An air terminal is a pointed solid or tubular rod of conducting material with proper mounting and connection to a conductor. The position of four air terminals can be uniformly distributed around the antenna at a distance equal to the height of the air terminal.

   The air terminal diameter should be 12 mm for copper or 15 mm for aluminium. The height of the air terminals should be 25 cm to 50 cm. All air terminals should be connected to the down conductors. The diameter of the air terminal should be kept to a minimum to reduce GNSS signal shading.

2) On metallic structures

   Protection is as described for non-metallic structures, but the air terminals can be connected directly to the conducting structure without the need for down conductors.

Air terminal arrangement, plan view

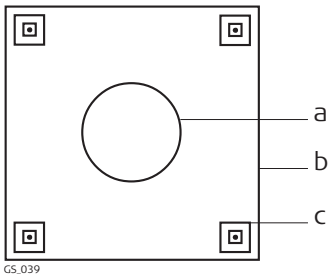

a) Antenna
b) Support structure
c) Air terminal

Grounding the instrument/antenna

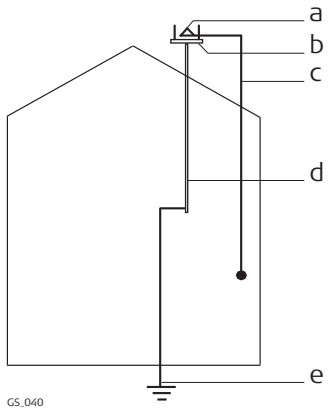

a) Antenna
b) Lightning conductor array
c) Antenna/instrument connection
d) Metallic mast
e) Connection to earth

CAUTION

During the transport, shipping or disposal of batteries it is possible for inappropriate mechanical influences to constitute a fire hazard.

Precautions:

Before shipping the product or disposing of it, discharge the batteries by running the product until they are flat.

When transporting or shipping batteries, the person in charge of the product must ensure that the applicable national and international rules and regulations are observed. Before transportation or shipping contact your local passenger or freight transport company.

WARNING

High mechanical stress, high ambient temperatures or immersion into fluids can cause leakage, fire or explosions of the batteries.

Precautions:

Protect the batteries from mechanical influences and high ambient temperatures. Do not drop or immerse batteries into fluids.

WARNING

If battery terminals are short circuited e.g. by coming in contact with jewellery, keys, metallised paper or other metals, the battery can overheat and cause injury or fire, for example by storing or transporting in pockets.

Precautions:

Make sure that the battery terminals do not come into contact with metallic objects.

☞ The following advice is only valid for power adapter and car adapter.

WARNING

If you open the product, either of the following actions may cause you to receive an electric shock.

- Touching live components
- Using the product after incorrect attempts were made to carry out repairs

Precautions:

Do not open the product. Only Leica Geosystems authorised service centres are entitled to repair these products.

☞ The following advice is only valid for power adapter or docking station.

WARNING

The product is not designed for use under wet and severe conditions. If unit becomes wet it may cause you to receive an electric shock.

Precautions:

Use the product only in dry environments, for example in buildings or vehicles. Protect the product against humidity. If the product becomes humid, it must not be used!

WARNING

If the product is improperly disposed of, the following can happen:

- If polymer parts are burnt, poisonous gases are produced which may impair health.
- If batteries are damaged or are heated strongly, they can explode and cause poisoning, burning, corrosion or environmental contamination.
- By disposing of the product irresponsibly you may enable unauthorised persons to use it in contravention of the regulations, exposing themselves and third parties to the risk of severe injury and rendering the environment liable to contamination.

Precautions:

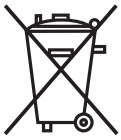

The product must not be disposed with household waste.
Dispose of the product appropriately in accordance with the national regulations in force in your country.
Always prevent access to the product by unauthorised personnel.

Product-specific treatment and waste management information can be received from your Leica Geosystems distributor.

WARNING

Only Leica Geosystems authorised service centres are entitled to repair these products.

1.6 Electromagnetic Compatibility EMC

Description

The term Electromagnetic Compatibility is taken to mean the capability of the product to function smoothly in an environment where electromagnetic radiation and electrostatic discharges are present, and without causing electromagnetic disturbances to other equipment.

WARNING

Electromagnetic radiation can cause disturbances in other equipment.
Although the product meets the strict regulations and standards which are in force in this respect, Leica Geosystems cannot completely exclude the possibility that other equipment may be disturbed.

CAUTION

There is a risk that disturbances may be caused in other equipment if the product is used with accessories from other manufacturers, for example field computers, personal computers or other electronic equipment, non-standard cables or external batteries.
Precautions:
Use only the equipment and accessories recommended by Leica Geosystems. When combined with the product, they meet the strict requirements stipulated by the guidelines and standards. When using computers or other electronic equipment, pay attention to the information about electromagnetic compatibility provided by the manufacturer.

CAUTION

Disturbances caused by electromagnetic radiation can result in erroneous measurements.
Although the product meets the strict regulations and standards which are in force in this respect, Leica Geosystems cannot completely exclude the possibility that the product may be disturbed by intense electromagnetic radiation, for example, near radio transmitters, two-way radios or diesel generators.
Precautions:
Check the plausibility of results obtained under these conditions.

CAUTION

If the product is operated with connecting cables attached at only one of their two ends, for example external supply cables, interface cables, the permitted level of electromagnetic radiation may be exceeded and the correct functioning of other products may be impaired.
Precautions:
While the product is in use, connecting cables, for example product to external battery, product to computer, must be connected at both ends.

Radios or Digital Cellular Phones

Use of product with radio or digital cellular phone devices:

WARNING

Electromagnetic fields can cause disturbances in other equipment, in installations, in medical devices, for example pacemakers or hearing aids and in aircraft. It can also affect humans and animals.
Precautions:
Although the product meets the strict regulations and standards which are in force in this respect, Leica Geosystems cannot completely exclude the possibility that other equipment can be disturbed or that humans or animals can be affected.

- Do not operate the product with radio or digital cellular phone devices in the vicinity of filling stations or chemical installations, or in other areas where an explosion hazard exists.
- Do not operate the product with radio or digital cellular phone devices near to medical equipment.
- Do not operate the product with radio or digital cellular phone devices in aircraft.

1.7 FCC Statement, Applicable in U.S.

The greyed paragraph below is only applicable for products without radio.

WARNING

This equipment has been tested and found to comply with the limits for a Class B digital device, pursuant to part 15 of the FCC rules.
These limits are designed to provide reasonable protection against harmful interference in a residential installation.
This equipment generates, uses and can radiate radio frequency energy and, if not installed and used in accordance with the instructions, may cause harmful interference to radio communications. However, there is no guarantee that interference will not occur in a particular installation.
If this equipment does cause harmful interference to radio or television reception, which can be determined by turning the equipment off and on, the user is encouraged to try to correct the interference by one or more of the following measures:

- Reorient or relocate the receiving antenna.
- Increase the separation between the equipment and the receiver.
- Connect the equipment into an outlet on a circuit different from that to which the receiver is connected.
- Consult the dealer or an experienced radio/TV technician for help.

WARNING

Changes or modifications not expressly approved by Leica Geosystems for compliance could void the user's authority to operate the equipment.

Labelling CS10

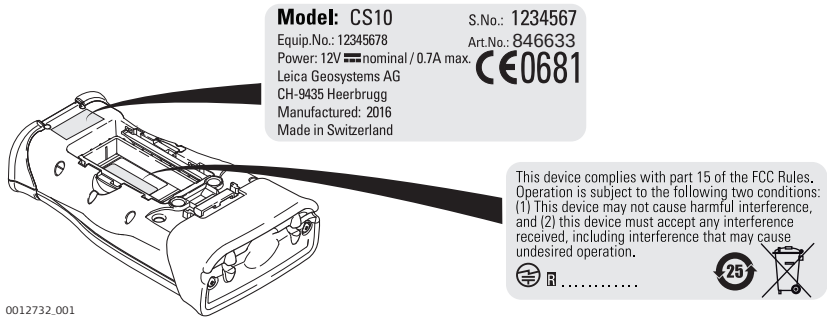

Labelling CS15

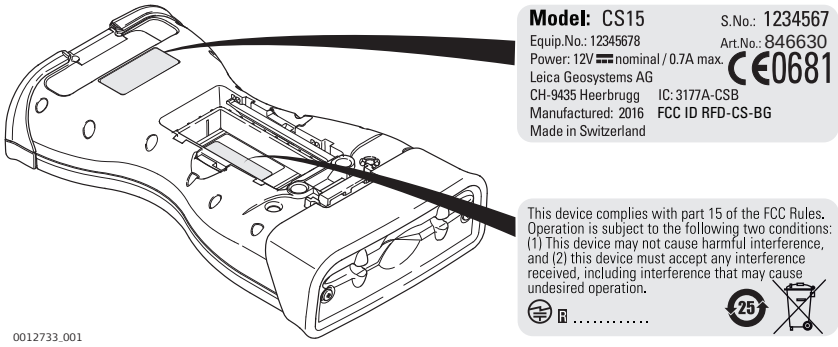

Labelling CTR16/CTR17

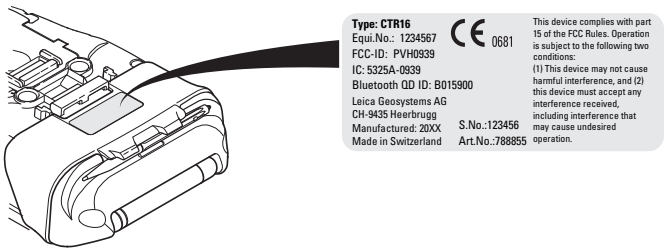

0012772_001

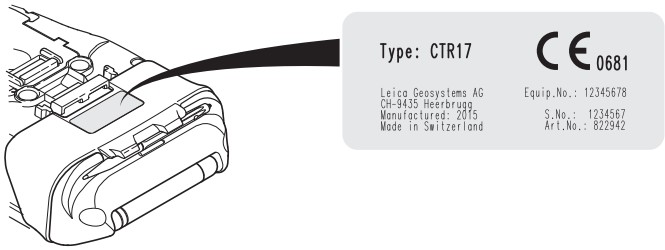

003053_002

Labelling GS05, GS06

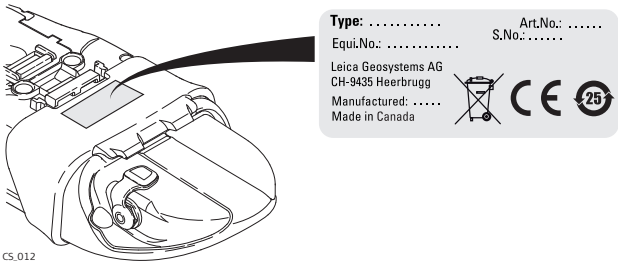

CS_012

Labelling GS08plus

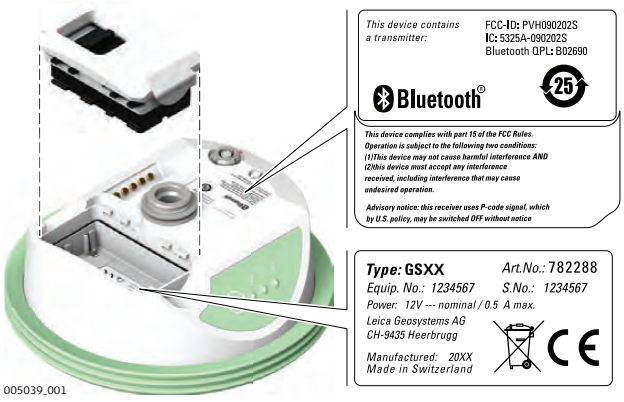

005039_001

Labelling internal battery GEB212

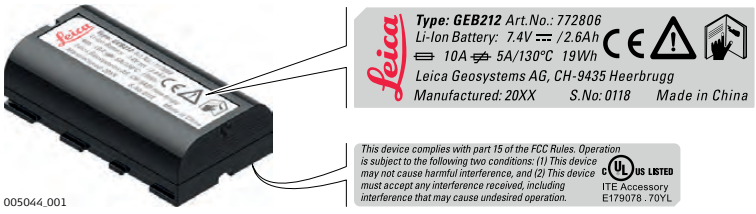

005044_001

Exposure to radio frequency (RF) signals

The wireless device is a radio transmitter and receiver. It is designed and manufactured not to exceed the emission limit for exposure to radio frequency (RF) energy set by the OET Bulletin 65 Supplement C / Ministry of Health (Canada), Safety Code 6. These limits are part of comprehensive guidelines and established permitted levels of RF energy for the general population. These guidelines are based on the safety standards previously set by international standard bodies. These standards include a substantial safety margin designed to assure the safety of all persons, regardless of age and health.
This device and its antenna must not be co-located or operating in conjunction with any other antenna or transmitter.
This device has been shown to be capable of compliance for localised specific absorption rate (SAR) for uncontrolled environment / general public exposure limits specific in ANSI/IEEE C95.1-1992 and had been tested in accordance with the measurement procedures specified in IEEE Std. 1528-2003.

WARNING

This Class (B) digital apparatus complies with Canadian ICES-003.
Cet appareil numérique de la classe (B) est conforme à la norme NMB-003 du Canada.

2 Description of the System

2.1 Overview

System components

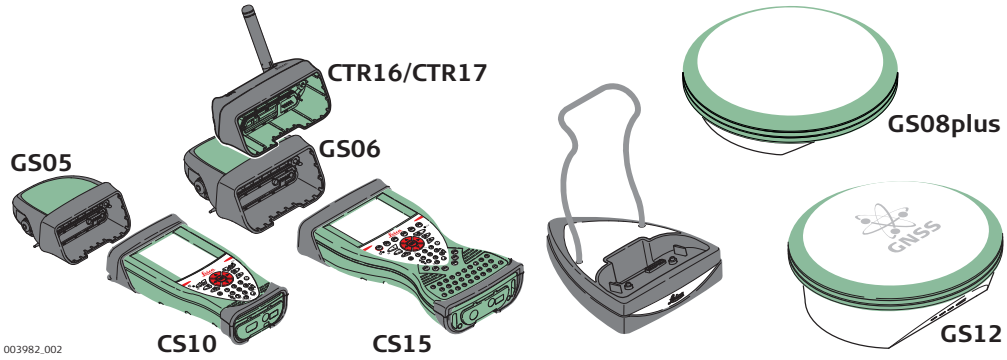

2.2 Terminology

CS general description

CS is a collective term describing the various models of the multi-purpose field controller which is used with GNSS and TPS instruments.

CS available models

Model	Touch screen	Colour display	Internal 3.5 GSM/ UMTS modem	Internal battery*1	SD card	Bluetooth	Wireless LAN 802.11b/g	Windows CE
3.5G (CS10/CS15)	✓	✓	✓	✓	✓	✓	-	✓
3.5G (CS15, for certain countries only)	✓	✓	✓	✓	✓	✓	✓	✓
☞ Use the supplied stylus on the screens of the touch screen.								

*1 removable

CS available radio extensions

Radios for remote control (RCS) are available in the following variations:

Type	Description
CS15 with CTR16/CTR17, no internal radio	Field controller without integrated radio modem. A high performance wireless data transfer device (CTR16/CTR17) can be attached.
CS15 with CGR15, no internal radio	The CGR15 is a receiver-only UHF radios that can be mounted directly onto the CS15. The CGR15 transforms the CS15 into a fully flexible RTK rover that supports both GSM/GPRS and UHF communications.

Software for all CS models

Software type	Description
CS firmware (CS_xx.fw)	This software includes: - The language-specific version of Windows CE. - The basic functionality of the CS.

Software for the GS05/GS06

Software type	Description
GS firmware (GS_xx.fw)	This software includes: - The firmware for the measurement engine.

Software for the GS08plus

Software type	Description
ME firmware (ME_xx.fw)	This software includes: - The firmware for the measurement engine.

Software upload

☞ Uploading firmware can take some time. Ensure that the battery is at least 75% full before beginning the upload, and do not remove the battery during the upload process.

Software for	Description
All CS models	The software is stored in the flash RAM of the CS field controller. **CS firmware update instructions** • Download the most recent CS firmware file from https://myworld.leica-geosystems.com. Refer to "Introduction". • Connect the CS field controller to your PC. Refer to "4.1.13 Connecting to a Personal Computer". • Copy CS firmware file into the /SYSTEM directory on the Leica SD card or USB stick. • Tap the Loader icon from the desktop, to run the Loader application. • Browse to the directory into which you copied CS firmware file, select it and start the upload. • A message will appear when the upload is complete. ☞ Ensure that a Leica SD card is inserted into the CS field controller before starting the upload.

Software for	Description
GS05/GS06	The software is stored in the flash RAM of the GS05/GS06. **GS firmware update instructions** • Download the most recent GS firmware file from https://myworld.leica-geosystems.com. Refer to "Introduction". • Connect the CS field controller to your PC. Refer to "4.1.13 Connecting to a Personal Computer". • Copy GS firmware file into the /SYSTEM directory of the Leica SD card. • Connect the GS05/GS06 to the CS field controller. Refer to "4.1.11 Setting up as Handheld GNSS". • Establish a connection between the GS05/GS06 and the CS field controller. Refer to the Leica Viva TechRef (Connections.. - GPS connection wizard). • Start the upload. Refer to the Leica Viva GNSS Getting Started Guide (Appendix B Uploading System Files). • A message will appear when the upload is complete.
GS08plus/GS12	The software is stored in the flash RAM of the GS08plus/GS12. **ME firmware update instructions** • Download the most recent ME firmware file from https://myworld.leica-geosystems.com. Refer to "Introduction". • Connect the CS field controller to your PC. Refer to "4.1.13 Connecting to a Personal Computer". • Copy ME firmware file into the /SYSTEM directory of the Leica SD card. • Connect the GS08plus/GS12 with the GEV234/GEV237 cable to the CS field controller and establish a connection between the GS08plus/GS12 and the CS field controller. Refer to the Leica Viva TechRef (Connections.. - GPS connection wizard). • Start the upload. Refer to the Leica Viva GNSS Getting Started Guide (Appendix B Uploading System Files). • A message will appear when the upload is complete.

2.3.2 Power Concept

General

Use the batteries, chargers and accessories recommended by Leica Geosystems to ensure the correct functionality of the instrument.

Power options

Model	Power supply
all CS models	Internally by GEB211/GEB212 battery, OR Externally by docking station, OR Externally by GEV235 cable, OR Externally by GEV219 cable (only CS models with LEMO CBC01 connector module), OR Externally by GDC221 car adapter If an external power supply is connected and the internal battery is inserted, then the external power is used.
CTR16/CTR17	Externally by CS field controller
GS05/GS06	Externally by CS field controller
GS08plus/GS12	Internally by GEB211/GEB212 battery, OR Externally by GEV219 cable If an external power supply is connected and the internal battery is inserted, then the external power is used.

2.3.3 Data Storage Concept

Description

Data is stored on a memory device. The memory device can be an SD card, USB stick or internal memory.

Memory device

SD card: All CS field controllers have an SD card slot fitted as standard. An SD card can be inserted and removed. Available capacity: 8 GB.

USB stick: All CS field controllers have a USB port fitted as standard.

Internal memory: All CS field controllers have an internal memory fitted as standard. Available capacity: 1 GB.

☞ While other SD cards can be used, Leica Geosystems recommends to only use Leica SD cards and is not responsible for data loss or any other error that can occur while using a non-Leica card.

☞ Removing the SD card or USB stick while the CS field controller is turned on can cause loss of data. Only remove the SD card or USB stick or unplug connecting cables when the CS field controller is switched off.

Transfer Data

Data can be transferred in various ways. Refer to "4.1.13 Connecting to a Personal Computer".

☞ SD cards can directly be used in an OMNI drive as supplied by Leica Geosystems. Other PC card drives can require an adaptor.

Container for GS08plus/GS12/ GS14 instrument and accessories 1/2

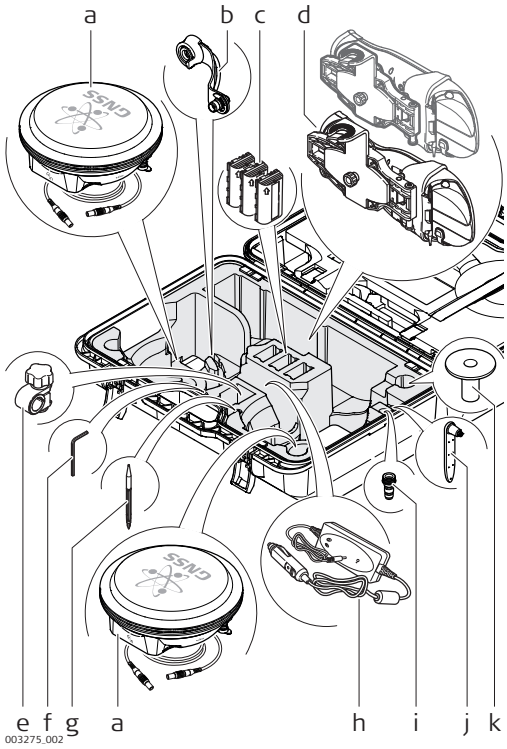

a) GS08plus/GS12/GS14 GNSS antenna and cable
b) GAD108 arm
c) GEB211/GEB212 batteries
d) CS field controller with CGR radio cap and GHT62 holder for CS field controller on pole
e) GHT63 clamp
f) Allen key
g) Supplied stylus
h) GDC221 car adapter
i) TNC QN-adapter
j) GAT21 antenna
k) GHT36 base for telescopic rod

Container for GS08plus/GS12/ GS14 instrument and accessories 2/2

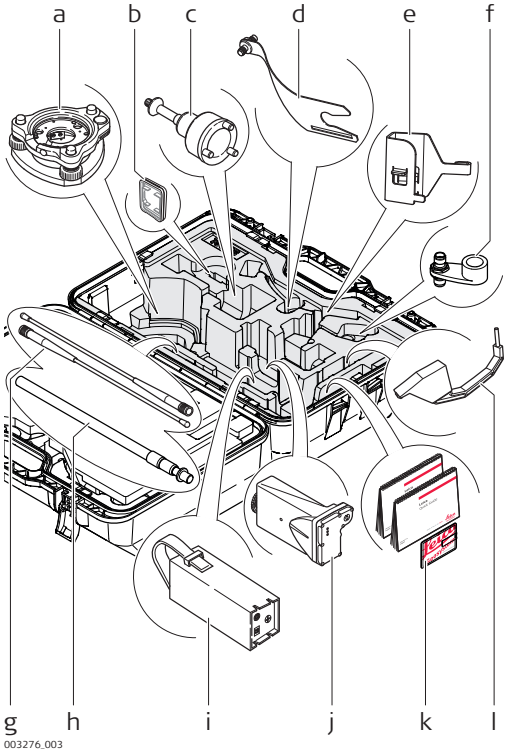

a) Tribrach
b) SD card
c) GRT146 carrier
d) GAD33 arm 15 cm
e) GHT58 tripod bracket for GFU housing
f) GAD34 arm 3 cm
g) Antennas of device
h) GAD32 telescopic antenna rod
i) GEB371 battery
j) GFU device such as radio
k) Manual & USB documentation card
l) Height hook

Container for GS08plus instrument and accessories

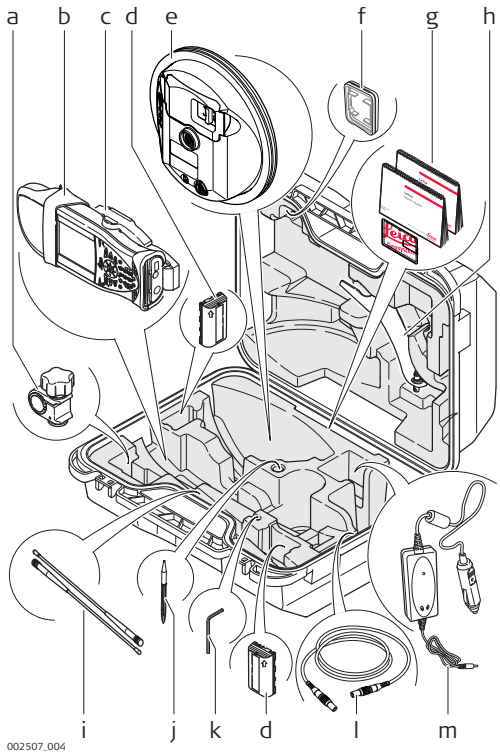

a) GHT63 clamp
b) CS10 field controller with CGR10 radio and GAT21 antenna
c) GHT62 holder for CS10 field controller on pole
d) GEB211/GEB212 batteries
e) GS08plus antenna
f) SD card
g) Manual & USB documentation card
h) GAD33 arm 15 cm
i) Antennas of device
j) Supplied stylus
k) Allen key
l) Cable
m) GDC221 car adapter

Container for GS08plus/GS12/ GS14 instrument and accessories

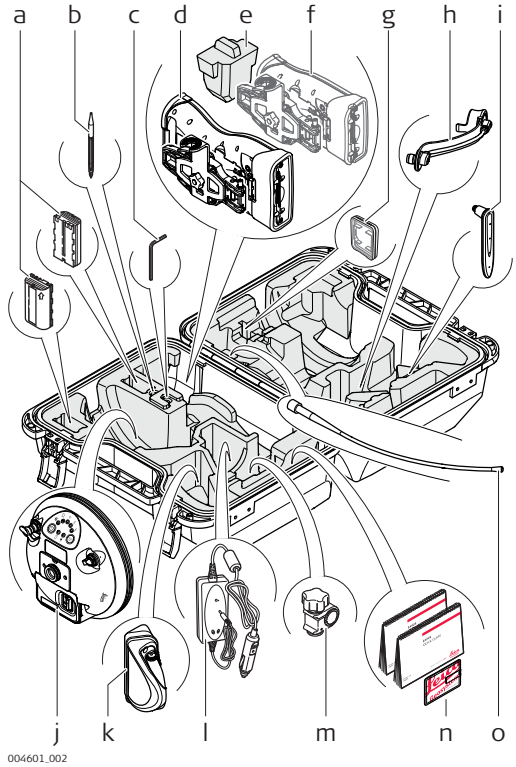

a) GEB212 batteries
b) Supplied stylus
c) Allen key
d) CS15 field controller
e) Filling element (required for CS10 only)
f) CS10 field controller
g) microSD card including adapter or SD card
h) GAD108 arm
i) GAT21 antenna for CGR radio
j) GS14/GS12/GS08plus antenna
k) CGR radio
l) GDC221 car adapter
m) GHT63 clamp
n) Manual & USB documentation card
o) GAT1/GAT2 radio antenna

Container for Viva Uno instrument and accessories part 1 of 2

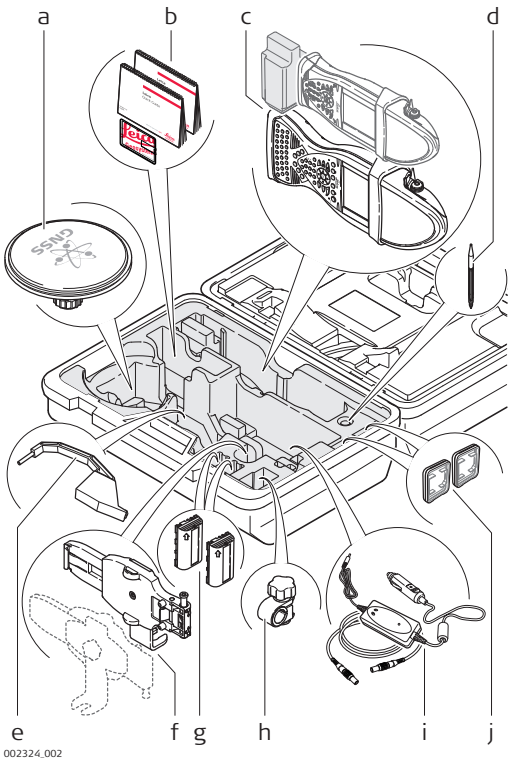

a) Antenna and GAD31 adapter
b) Manual & USB documentation card
c) CS field controller with GS GNSS antenna cap
d) Supplied stylus
e) Height hook
f) GHT62 holder for CS field controller on pole
g) GEB211/GEB212 batteries
h) GHT63 clamp
i) GDC221 car adapter
j) SD cards

Container for Viva Uno instrument and accessories part 2 of 2

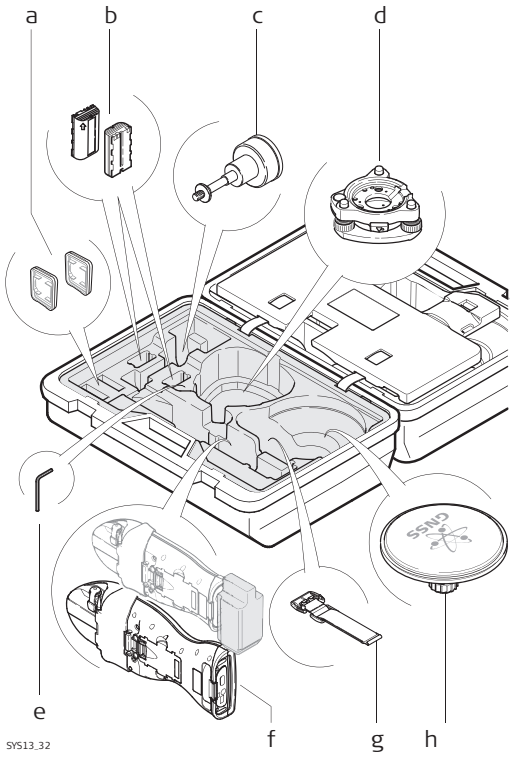

a) SD cards
b) GEB211/GEB212 batteries
c) GRT146 carrier
d) Tribrach
e) Allen key
f) Viva Uno instrument (CS field controller with GS GNSS antenna cap)
g) GHT61 hand strap
h) Antenna and GAD31 adapter

Upside of CS10

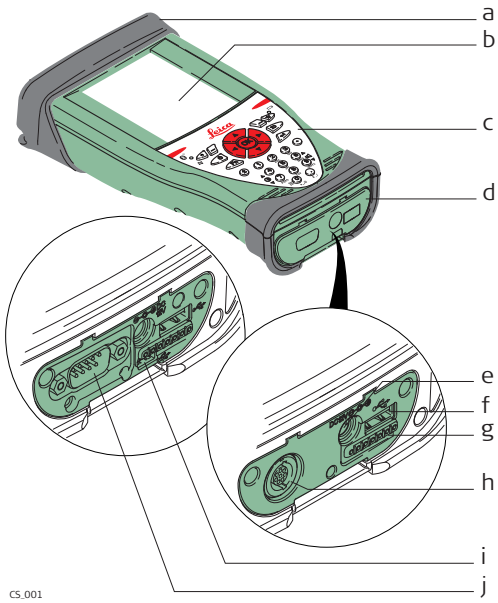

a) Slot Cover
b) Screen
c) Keyboard
d) Port cover
e) Power socket
f) USB A Host port
g) Docking station contacts
h) LEMO port (USB and serial)
i) USB Mini port
j) DSUB9 port

Underside of CS10

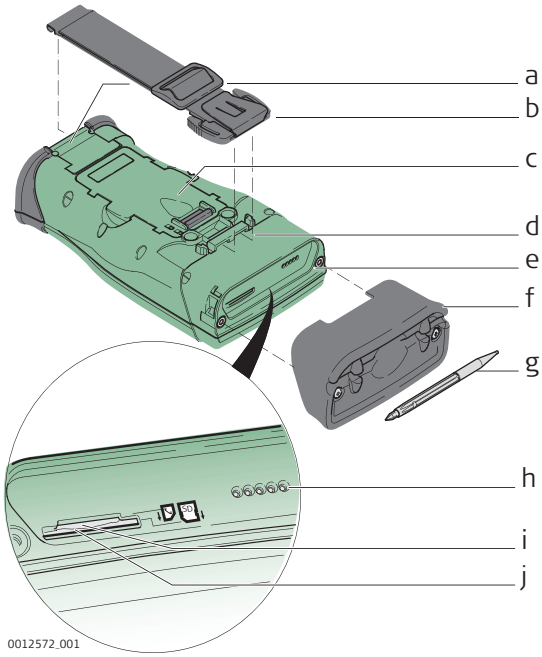

a) Hand strap bottom clips
b) Hand strap
c) Battery compartment
d) Hand strap top clips
e) Slots
f) Slot cover
g) Stylus
h) GS05 contacts
i) SIM card slot
j) SD card slot

2.5.2 CS15

Upside of CS15

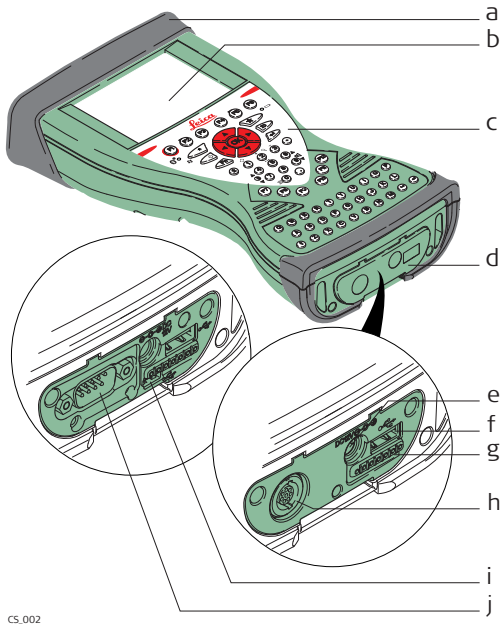

a) Slot cover
b) Screen
c) Keyboard
d) Port cover
e) Power socket
f) USB A Host port
g) Docking station contacts
h) LEMO port (USB and serial)
i) USB Mini port
j) DSUB9 port

Underside of CS15

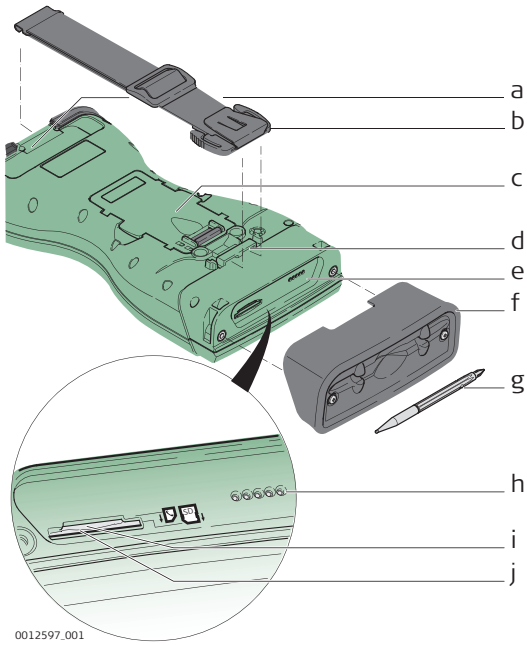

a) Hand strap bottom clips
b) Hand strap
c) Battery compartment
d) Hand strap top clips
e) Slots
f) Slot cover
g) Stylus
h) GS06 contacts
i) SIM card slot
j) SD card slot

2.6 Docking Station Components

Docking station

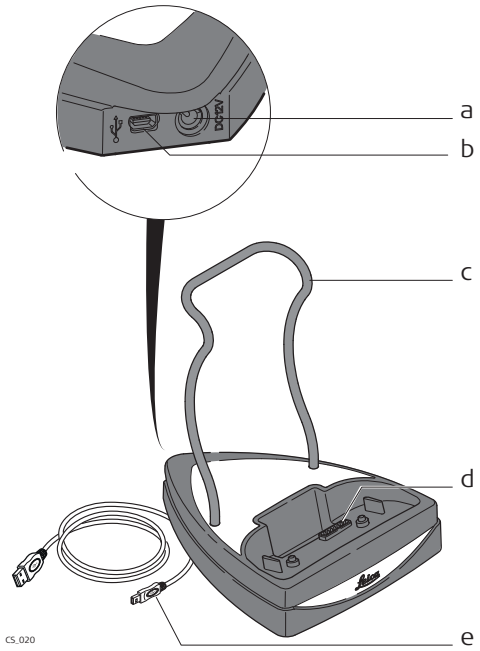

a) Power socket
b) USB port
c) Docking station bracket
d) Docking station contacts
e) GEV223 data cable

2.7 GS08plus/GS12 Components

GS08plus/GS12 components

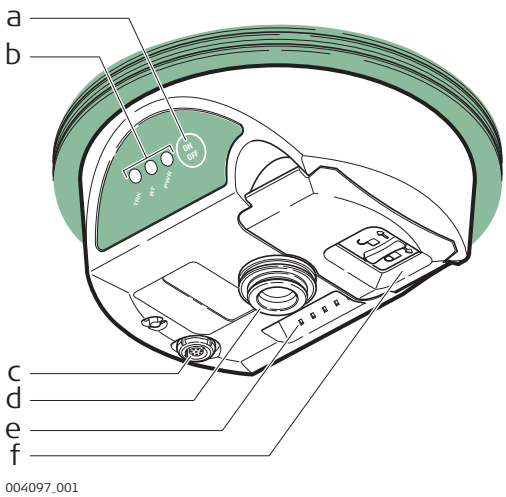

a) ON/OFF button
b) LEDs
c) LEMO port including USB port
d) Mechanical Reference Plane (MRP)
e) Clip-on contacts (only GS12)
f) Battery compartment

3 User Interface

3.1 Keyboard

Keyboard display CS10

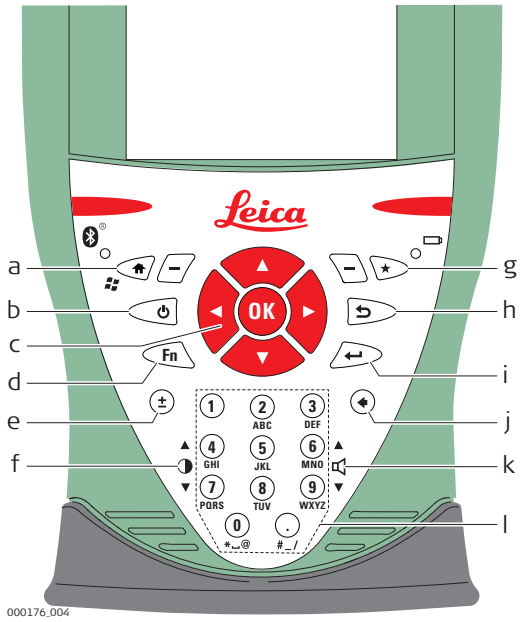

a) Home
b) ON/OFF
c) Arrow keys, **OK**
d) **Fn**
e) ± key
f) Brightness
g) Favourites
h) ESC
i) Enter
j) Backspace
k) Volume
l) Numeric keys

Keyboard display CS15

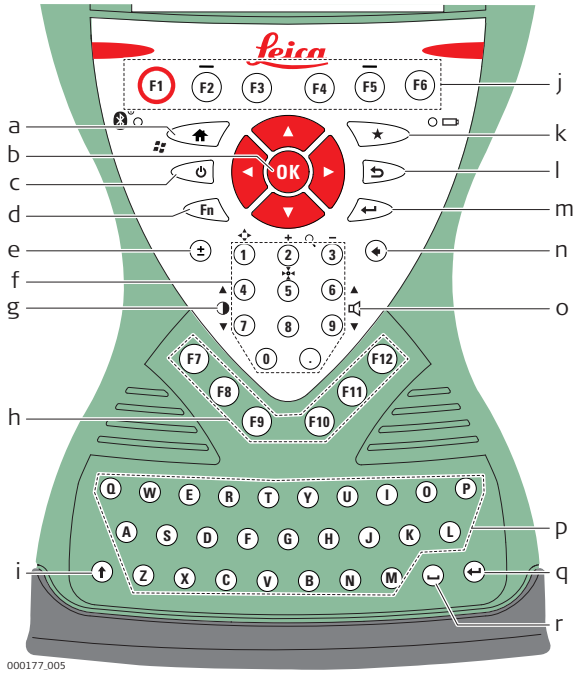

a) Home
b) Arrow keys, **OK**
c) ON/OFF
d) **Fn**
e) ± key
f) Numeric keys
g) Brightness
h) Function keys **F7** - **F12**
i) CAPS Lock
j) Function keys **F1** - **F6**
k) Favourites
l) ESC
m) ENTER
n) Backspace
o) Volume
p) Alpha keys
q) ENTER
r) SPACE

Keys

Key	Function
Function keys **F1**-**F6**	Correspond to six softkeys that appear on the bottom of the screen when the screen is activated.
Function keys **F7**-**F12**	User definable keys to execute chosen commands or access chosen screens.
Alpha keys	To type letters.
Numeric keys	To type numbers.

Key	Function
Caps Lock	Switches between upper case and lower case letters.
Backspace	Clears all entry at the beginning of user input. Clears the last character during user input.
Esc	Leaves the current screen without storing any changes.
Fn	Switches between the first and second level of function keys.
Space	Enters a blank.
Enter	Selects the highlighted line and leads to the next logical menu/ dialog. Starts the edit mode for editable fields. Opens a selectable list.
ON/OFF	If CS10/CS15 already off: Turns on CS10/CS15 when held for 2 s. If CS10/CS15 in stand-by mode: Turns on CS10/CS15 when held < 2 s. If CS10/CS15 already on: • Puts CS10/CS15 into stand-by mode when held < 2 s. Refer to "Stand-by". • Turns to Power Options menu when held for 2 s. Refer to "Power Options menu". • Turns off CS10/CS15 when held for 5 s.
Favourites	Goes to a website by simply clicking its name.
Home	Switches to the Windows CE Start Menu.
Arrow keys	Move the focus on the screen.
OK	Selects the highlighted line and leads to the next logical menu/ dialog. Starts the edit mode for editable fields. Opens a selectable list.

Key combinations

Key	Function
Fn + 4	Hold **Fn** while pressing **4**. Increase the screen brightness.
Fn + 7	Hold **Fn** while pressing **7**. Decrease the screen brightness.
Fn + 6	Hold **Fn** while pressing **6**. Increase the volume for acoustic warning signals, beeps and keypresses on the CS field controller.
Fn + 9	Hold **Fn** while pressing **9**. Decrease the volume for acoustic warning signals, beeps and keypresses on the CS field controller.
Fn + .	Hold **Fn** while pressing **.**. Take a screenshot of the current SmartWorx Viva screen.

3.2 Operating Principles

Keyboard and touch screen

The user interface is operated either by the keyboard or by the touch screen with supplied stylus. The workflow is the same for keyboard and touch screen entry, the only difference lies in the way information is selected and entered.

Operation by keyboard

Information is selected and entered using the keys. Refer to "3.1 Keyboard" for a detailed description of the keys on the keyboard and their function.

Operation by touch screen

Information is selected and entered on the screen using the supplied stylus.

Operation	Description
To select an item	Tap on the item.
To start the edit mode in editable fields	Tap on the editable field.
To highlight an item or parts of it for editing	Drag the supplied stylus from the left to the right.
To accept data entered into an editable field and exit the edit mode	Tap on the screen outside of the editable field.
To open a context-sensitive menu	Tap on the item and hold for 2 s.

4 Operation

4.1 Equipment Setup

4.1.1 Setting up as a Post-Processing Base

Use

The equipment setup described is used for static operations over markers.

Description

The instrument can be programmed with the CS field controller before use which can then be omitted from the setup.

☞

- The antenna is mounted directly using screw fitting. If using stub and adapter, procedures can vary slightly.
- When using the adapter and carrier, ensure that the antenna and the adapter assembly slide down the full length of the carrier stub. An incorrectly mounted antenna will have a direct effect on the results.

☞

If the instrument is left in the container during use in high temperatures, the lid should be left open. Refer to the User Manual for operating and storage temperatures.

☞

Use an external battery such as GEB371 to ensure operation for a full day.

Equipment setup - GS08plus/GS12/ GS14

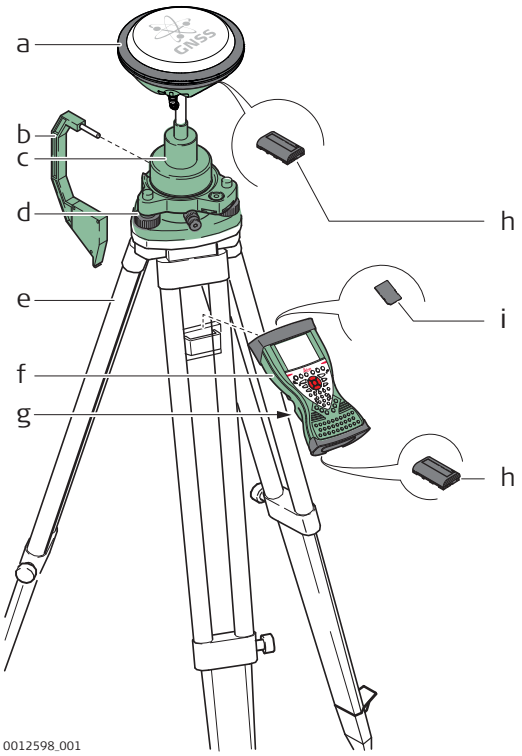

a) GS08plus/GS12/GS14 instrument
b) Height hook
c) GRT146 carrier
d) Tribrach
e) Tripod
f) CS field controller
g) GHT61 hand strap
h) GEB211/GEB212 battery
i) SD card

Equipment setup step-by-step

Step	Description	
1.	Set up the tripod.	
2.	Mount and level the tribrach on the tripod.	
3.	Ensure that the tribrach is over the marker.	
4.	Place and lock the carrier in the tribrach.	
	GS10/GS25	GS08plus/GS12/GS14/GS15
5.	Screw the GNSS antenna onto the carrier.	Insert the data storage device (only GS14/GS15) and the batteries into the GS08plus/GS12/GS14/GS15.
6.	Check that the tribrach is still level.	Screw the GS08plus/GS12/GS14/GS15 onto the carrier.
7.	Insert the batteries into the instrument.	Check that the tribrach is still level.
8.	Insert the SD card into the instrument.	Insert the data storage device and the battery into the CS field controller.
9.	Connect the instrument to the GNSS antenna using the antenna cable and port ANT on the instrument.	-
10.	Switch on the CS field controller and connect it to the instrument if necessary. ☞ Mandatory for the GS08plus/GS12 and optional for the GS10/GS14/GS15/GS25.	
11.	To hang the instrument on the tripod leg, use the hook on the rear of the unit. Or place the instrument in the container.	To hang the CS field controller on the tripod leg, use the hook on the hand strap. Refer to the CS10/CS15 User Manual.
12.	Insert the height hook into the carrier.	
13.	Measure the antenna height using the height hook.	
14.	Press the ON/OFF button on the instrument for at least 2 s (GS25: 3 s) to switch on the instrument .	

4.1.2 Setting up as a Real-Time Base

Use

The equipment setup described is used for real-time base stations with the need of optimal radio coverage. Raw observation data can also be collected for post-processing.

Description

The GS10/GS25 instrument clips to the tripod leg. Connections are made to the GNSS and radio antenna. The radio antenna is mounted on the antenna arm which clips to the GNSS antenna. The GS10/GS12/GS14/GS15/GS25 instrument can be programmed with the CS field controller before use which can then be omitted from the setup.
The GS10/GS25 instrument can be used as a DGPS base station, if fitted with the DGPS option, and as a real-time base station.
The connection between GS14/GS15 and CS field controller is made via Bluetooth.

☞

- The antenna is mounted directly using screw fitting. If using stub and adapter, procedures can vary slightly.
- When using the adapter and carrier, ensure that the antenna and the adapter assembly slide down the full length of the carrier stub. An incorrectly mounted antenna will have a direct effect on the results.
- Standard radio is used throughout the instructions. Digital cellular phones can also be used but the setup can differ slightly.

☞

If the instrument is left in the container during use in high temperatures, the lid should be left open. Refer to the User Manual for operating and storage temperatures.

☞

Use an external battery such as GEB371 to ensure operation for a full day.

Equipment setup - GS08plus/GS12/ GS14

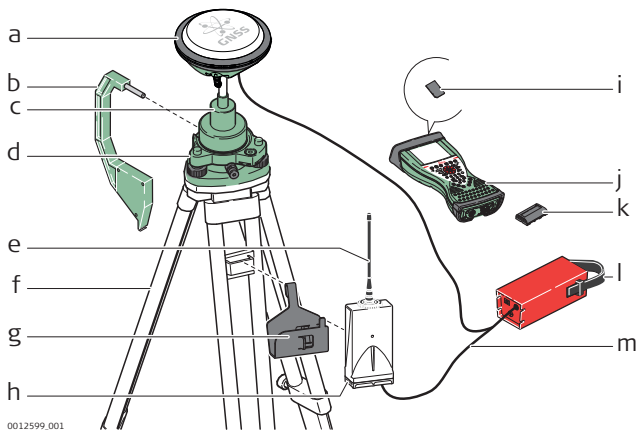

a) GS08plus/GS12/GS14 instrument
b) Height hook
c) GRT146 carrier
d) Tribrach
e) Antenna for device
f) Tripod
g) GHT58 tripod bracket
h) GFU radio modem
i) SD card
j) CS field controller
k) GEB211 / GEB212 battery
l) GEB371 external battery
m) GEV205 Y-cable for GS08plus instrument, GEV264 Y-cable for GS14 instrument

Equipment setup step-by-step

Step	Description		
1.	Set up the tripod.		
2.	Mount and level the tribrach on the tripod.		
3.	Ensure that the tribrach is over the marker.		
4.	Place and lock the carrier in the tribrach.		
	GS10/GS25	GS08plus/GS12/GS14 with external RTK device	GS14/GS15
5.	Screw the GNSS antenna onto the carrier.	Screw the GS08plus/GS12/GS14 onto the carrier.	Insert the data storage device and the batteries into the GS14/GS15.
6.	Check that the tribrach is still level.		Press the ON/OFF button on the instrument for at least 2 s to switch on the instrument.
7.	Insert the SD card and the batteries into the instrument.	Hang the external battery onto a tripod leg.	Screw the GS14/GS15 onto the carrier.
8.	Connect the instrument to the GNSS antenna using the antenna cable and port ANT on the instrument.	Hang the tripod bracket onto a tripod leg and attach the radio housing onto the tripod bracket.	Check that the tribrach is still level.
9.	Connect the CS field controller to the instrument if necessary.	Connect the GEV205 cable to the GS08plus/GS12 or the GEV264 cable to the GS14, to the external battery and to the radio housing.	Insert the SD card and the battery into the CS field controller.
10.	To hang the instrument on the tripod leg, use the hook on the rear of the unit. Or place the instrument in the container.	Insert the SD card and the battery into the CS field controller.	Connect the CS field controller to the instrument if necessary.
11.	Insert the height hook into the carrier.	Connect the CS field controller to the instrument if necessary.	To hang the CS field controller on the tripod leg, use the hook on the hand strap.
12.	Measure the antenna height using the height hook.	To hang the CS field controller on the tripod leg, use the hook on the hand strap.	Insert the height hook into the carrier.
13.	Clip the antenna arm to the GNSS antenna.	Insert the height hook into the carrier.	Measure the antenna height using the height hook.
14.	Screw the radio antenna onto the antenna arm.	Measure the antenna height using the height hook.	Press the ON/OFF button on the instrument for at least 2 s to switch on the instrument.

Step	Description		
15.	GS10 Attach the radio in its housing to port P2 or P3 on the instrument. GS25 Insert the slot-in radio into port P3 on the instrument.	Press the ON/OFF button on the instrument for at least 2 s to switch on the instrument.	-
16.	Connect the radio antenna to the radio using the second 1.2 m antenna cable.	-	-
17.	Press the ON/OFF button on the instrument for at least 2 s (GS25: 3 s) to switch on the instrument.	-	-

4.1.3 Setting up as a Real-Time Rover

Use

The equipment setup is used for real-time rover with extended periods of use in the field.

Description

The radio attaches to the instrument (GS10) or is inserted into the instrument (GS25) and is placed in the backpack. Connections are made to the GNSS antenna, radio antenna and CS field controller. The cables coming from the backpack can be disconnected when an obstacle such as a fence has to be crossed.
The CS field controller is fixed to the pole with the GHT62. Connection between the GS12/GS14/GS15/GS08plus instrument and the CS field controller is made through Bluetooth.

☞

- The antenna is mounted directly using screw fitting. If using stub and adapter, procedures can vary slightly.
- When using the pole with stub, ensure that the antenna and the screw-to-stub adapter slide down the full length of the stub before tightening the locking ring. An incorrectly mounted antenna will have a direct effect on the results.
- Aluminium poles are used. They can be replaced with their carbon fibre equivalent without any change to these instructions.
- Standard radio is used throughout the instructions. Digital cellular phones can also be used but the setup can differ slightly.

Equipment setup - GS08plus

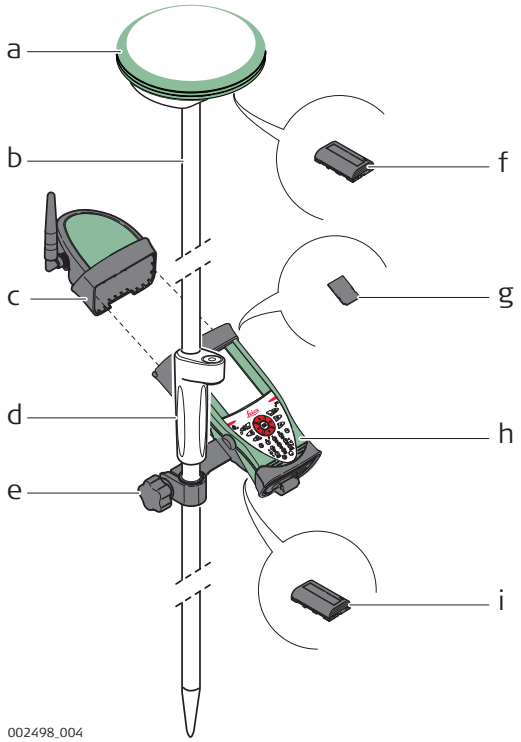

a) GS08plus instrument
b) Pole
c) CGR10 radio
d) Grip for pole
e) GHT62 holder
f) GEB211/GEB212 battery
g) SD card
h) CS field controller
i) GEB211/GEB212 battery

Equipment setup step-by-step

Step	Description
1.	Attach the GHT62 holder to the pole.
2.	Insert the SD card and the battery into the CS field controller.
3.	☞ For real-time setup with radio: Attach the CGR radio to the CS field controller.
4.	Clip the CS field controller into the holder and lock it by pushing the locking pin into the locked position.
5.	Press ON/OFF button on the CS field controller to switch on.
	Proceed with step 6. for GS10/GS25 and with step 25. for GS12/GS14/GS15/GS08plus.
6.	Screw the GNSS antenna to the top of the pole.
7.	Insert the SD card and the batteries into the instrument.
8.	GS10 Attach the radio in its housing to port P2 or P3 on the instrument. GS25 Insert the slot-in radio into port P3 on the instrument.
9.	Place the instrument in the backpack with the top side facing outwards and the instrument front panel to the top.
10.	Fasten the strap around the instrument.
11.	Push the telescopic rod through the slit in the top of the backpack. Ensure that it is located in the sleeve inside the backpack and push it all the way to the bottom.
12.	Adjust the height of the telescopic rod to suit.
13.	Screw the radio antenna arm onto the telescopic rod.
14.	Connect the first 1.2 m antenna cable to the radio antenna.
15.	Pass the cable through the opening in the top of the backpack and down underneath the instrument.
16.	Connect the first 1.2 m antenna cable to the radio.
17.	Connect the 1.6 m antenna cable to port ANT on the instrument.
18.	Pass the 1.6 m antenna cable through a cable brake and down through the opening in the bottom corner of the backpack flap.
19.	Draw the required amount of cable out of the backpack and tighten the cable brake.
20.	Connect one end of the second 1.2 m antenna cable to the loose end of the 1.6 m antenna cable and the other end to the GNSS antenna.
21.	Connect the 1.8 m, CS to GS cable to the CS field controller.
22.	Pass the 1.8 m, CS to GS cable through the opening in the bottom corner of the backpack flap and up through a cable brake.
23.	Plug it into port P1 on the instrument.
24.	Press ON/OFF button on the instrument to switch on.
	GS12/GS14/GS15/GS08plus.
25.	Insert the data storage device (only GS14/GS15) and the batteries into the GS12/GS14/GS15/GS08plus.
26.	Press ON/OFF button on the GS12/GS14/GS15/GS08plus to switch on.
27.	Screw the GS12/GS14/GS15/GS08plus to the top of the pole.
28.	CS field controller and GS12/GS14/GS15/GS08plus are connected via Bluetooth.

4.1.4 Setting up Viva Uno

Use

The equipment setups described following are to be used for static operations over markers or for rover with extended periods of use in the field.

Description

The Viva Uno instrument consists of the CS field controller (CS10/CS15) and the GS GNSS antenna cap (GS05/GS06) attached to the CS field controller.
The CS field controller with the GS GNSS antenna cap attached, clips to the tripod leg. Connections are made to the external GNSS antenna.
The CS field controller with the GS GNSS antenna cap attached is fixed to the pole with the GHT62. The setup can be used as a DGPS rover, if fitted with the DGPS option.

☞

- GNSS antenna is mounted directly using screw fitting. If using stub and adapter, procedures can vary slightly.
- When using the adapter and carrier, ensure that the GNSS antenna and the adapter assembly slide down the full length of the carrier stub. An incorrectly mounted GNSS antenna will have a direct effect on the results.
- GNSS antenna is AS05.

☞

If the instrument is left in the container during use in high temperatures, the lid should be left open. Refer to the CS10/CS15 User Manual for operating and storage temperatures.

☞

It is always recommended to use the external GNSS antenna (AS05) to optimise the reception of satellite signals.

Viva Uno tripod setup

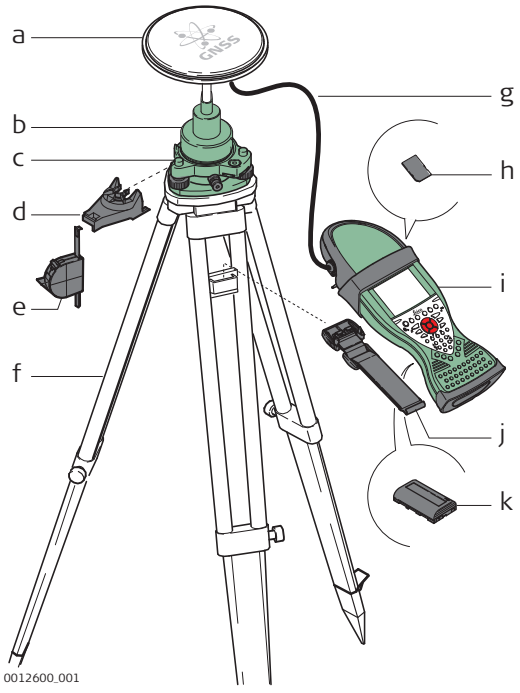

a) GNSS antenna AS05
b) GRT146 carrier
c) Tribrach
d) GHT196 tribrach bracket for height meter
e) GHM007 instrument height meter
f) Tripod
g) 1.2 m antenna cable
h) SD card
i) Viva Uno instrument (CS field controller with GNSS cap)
j) GHT61 hand strap
k) GEB211/GEB212 battery

Step	Description
1.	Set up the tripod.
2.	Mount and level the tribrach on the tripod.
3.	Ensure that the tribrach is over the marker.
4.	Place and lock the carrier in the tribrach.
5.	Screw the GNSS antenna onto the carrier.
6.	Check that the tribrach is still level.

Step	Description
7.	Insert the SD card and the battery into the CS field controller.
8.	Attach the GS GNSS antenna cap to CS field controller. Refer to the CS10/CS15 User Manual.
9.	Connect the antenna cable to the external GNSS antenna and to the GS GNSS antenna cap. ☞ When you are using the external GNSS antenna, ensure that you selected the correct Rover antenna (AS05 Tripod GHM).
10.	To hang the instrument on the tripod leg, use the hand strap on the rear of the CS field controller.
11.	Attach the tribrach bracket to the carrier and insert the instrument height meter into the tribrach bracket.
12.	Measure the antenna height using the instrument height meter.
13.	Press the ON/OFF button on the CS field controller for at least 2s to switch on the CS field controller.

Viva Uno rover setup

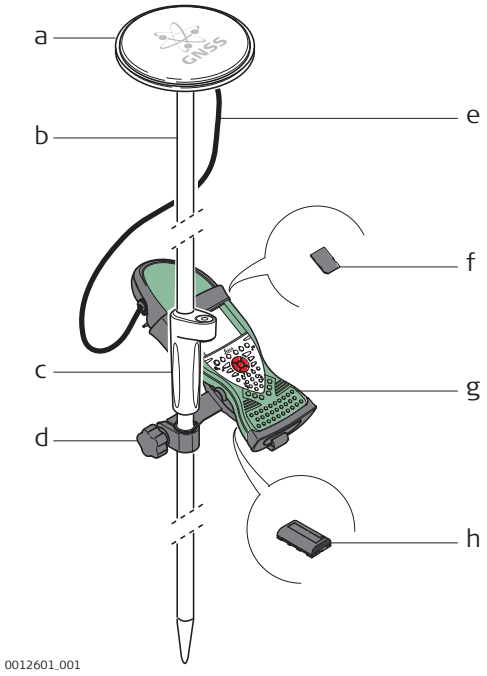

a) GNSS antenna AS05
b) Pole
c) Grip for pole
d) GHT62 holder
e) 1.2 m antenna cable
f) SD card
g) Viva Uno instrument (CS field controller with GS GNSS cap)
h) GEB211/GEB212 battery

Step	Description
1.	Attach the GHT62 holder to the pole.
2.	Insert the SD card and the battery into the CS field controller.
3.	Attach the GS GNSS antenna cap to CS field controller. Refer to the CS10/CS15 User Manual.
4.	Clip the CS field controller into the holder and lock it by pushing the locking pin into the locked position.
5.	Screw the GNSS antenna to the top of the pole.
6.	Adjust the height of the telescopic rod to suit.
7.	Connect the antenna cable to the external GNSS antenna and to the GS GNSS antenna cap. ☞ When you are using the external GNSS antenna, ensure that you selected the correct Rover antenna (AS05 Tripod GHM).
8.	Press ON/OFF button on the CS field controller to switch on.

Components of the GHT62 holder

The GHT62 holder consists of some components, as shown in the diagram.

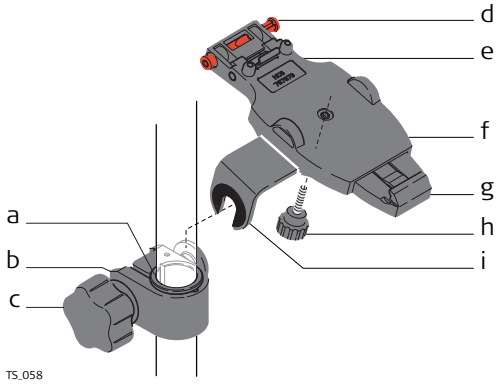

GHT63 clamp

a) Plastic sleeve
b) Pole clamp
c) Clamp bolt

GHT62 holder

d) Locking pin
e) Top clip
f) Mounting plate (extendable)
g) Bottom clip
h) Tightening screw
i) Mounting arm

Fixing the field controller and GHT62 to a pole step-by-step

Step	Description
☞	If you use the CS15 field controller, extend the mounting plate of the holder first.
☞	For an aluminium pole, fit the plastic sleeve to the pole clamp.
1.	Insert the pole into the clamp hole.
2.	Attach the holder to the clamp using the clamp bolt.
3.	Adjust the angle and the height of the holder on the pole to a comfortable position.
4.	Tighten the clamp with the clamp bolt.
5.	Before the field controller is placed onto the mounting plate, ensure that the locking pin is put into the unlocked position. To unlock the locking pin, push the locking pin to the left. 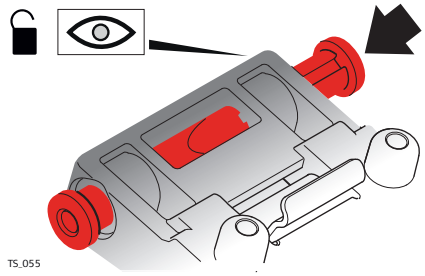
6.	Hold the field controller above the holder and lower the end of the field controller into the mounting plate.
7.	Apply slight pressure in a downward direction and then lower the top part of the field controller until the unit is clicked into the holder. The guides of the mounting plate aid in this action. 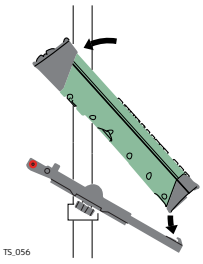
8.	After the field controller is placed onto the mounting plate, ensure that the locking pin is put into the locked position. To lock the locking pin, push the locking pin to the right. 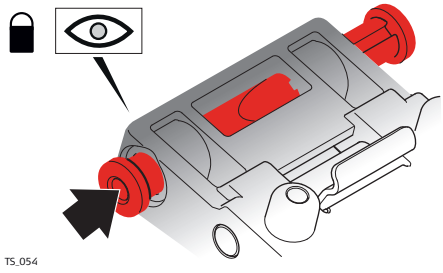

Detaching the field controller from a pole step-by-step

Step	Description
1.	Unlock the locking pin by pushing the locking pin to the left of the mounting plate.
2.	Place palm over the top of the field controller until fingers grip the bar of the holder underneath.
3.	Push from the top of the field controller toward the bar of the holder.
4.	While in this position, lift the top of the field controller from the holder. 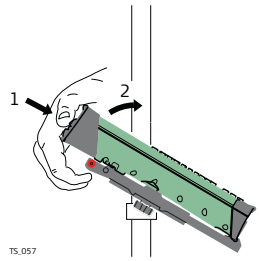

4.1.6 Fixing the Display Foil to the CS

☞ We strongly recommend to use the display foil to protect the display against scratches and dirt and to guarantee a trouble-free function of the touchscreen in extreme and humid weather conditions.

Preparation

- Ensure that the display is free of dust and grease.
- Use the provided microfibre cloth to clean the display.
- Look for a dust free and dry atmosphere surrounding while fixing the display foil. The recommended conditions are:

Temperature:	approx. 21°C
Humidity:	< 55%

Fixing the display foil step-by-step

The display foil lies between two thin carrier foils. The display foil has a silver-coloured sticker to peel away the carrier foil from the actual display foil.

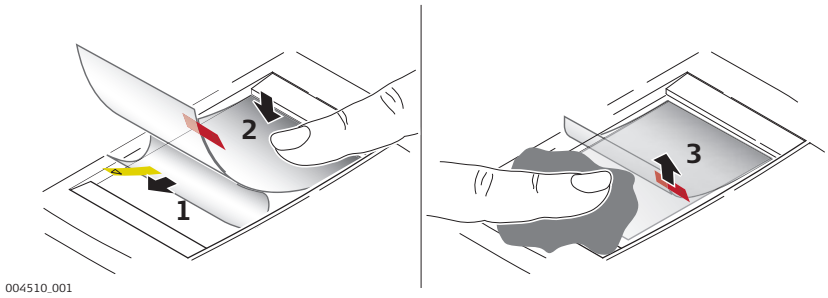

Step	Description
1.	Touch the yellow-coloured sticker with two fingers and pull it slowly upwards. The carrier foil is peeling away. ☞ Do not peel the carrier foil more than 2 cm - 3 cm away.
2.	Fix the adhesive underside of the display foil on the display edge. Peel away the carrier foil slowly and smooth it out gently onto the display.
3.	Remove the additional layer foil which has a red-coloured sticker.
4.	Potential air bubbles between display and display foil have to be smoothed out using the included microfibre cloth. ☞ Do not use sharp objects!
5.	In case of remaining dust or grease under the display foil or the need to replace the display foil, lift it again with some adhesive tape.

4.1.7 Fixing a Hand Strap to the CS

Fixing the CS to a hand strap step-by-step

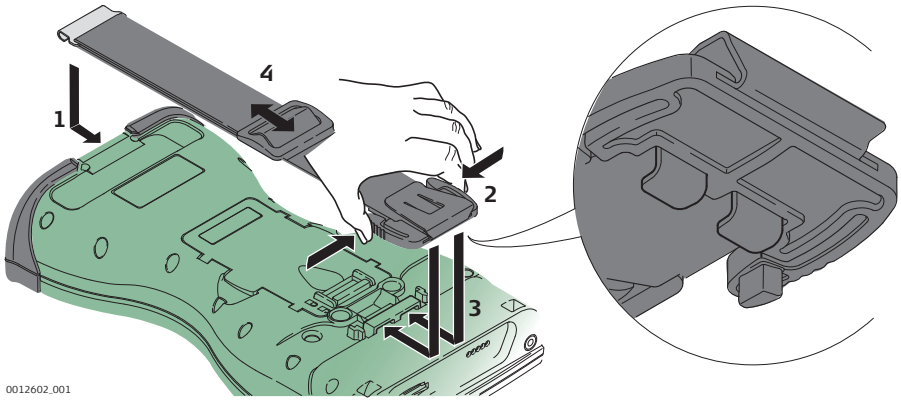

Step	Description
☞	Turn the CS field controller over.
1.	Take the end of the hand strap and clip it to the base of CS field controller.
2.	Compress the clips of the main hook.
3.	Lower the main hook onto the pivot knob of the CS field controller. A click can be felt when the clip is secure.
4.	Adjust the length of the hand strap.

4.1.8 Fixing the Slot Cover to the CS

Fixing the slot cover to the CS step-by-step

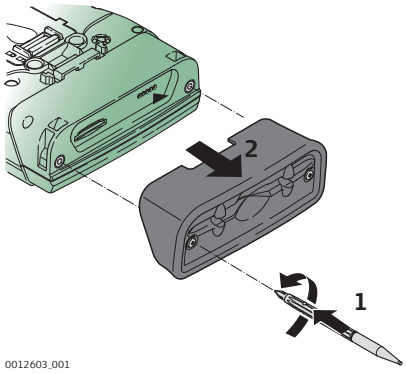

Step	Description
1.	Press the screwdriver end of the supplied stylus on the quarter-turn screws and loosen them.
2.	Remove the slot cover.
☞	Reattach the slot cover with the stylus, making sure the quarter-turn screws are seated.

4.1.9 Inserting and Removing a SIM Card

Insert and remove a SIM card step-by-step

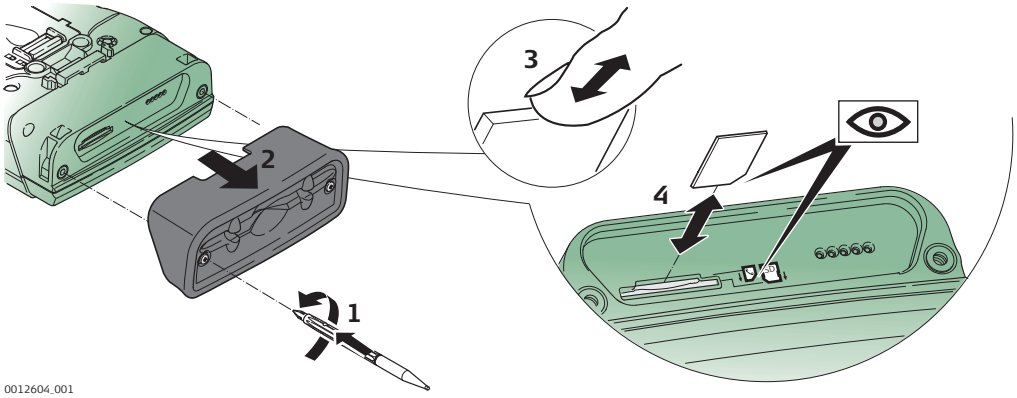

	Description
☞	The SIM card is inserted into a slot inside the top of the CS10/CS15.
1.	Loosen the screws inside the slot cover on top of the CS10/CS15 using the screwdriver end of the stylus.
2.	Detach the slot cover from the CS10/CS15.
3.	Slide the card firmly into the slot until it clicks into position. ☞ Do not force the card into the slot. The card should be held with the contacts facing the slot.
4.	Attach the slot cover and tighten the screws.
5.	To remove the card, detach the slot cover of the CS10/CS15.
6.	Gently press the top of the card to release it from the slot.
7.	Remove the SIM card and attach the slot cover.

4.1.10 Setting up the Docking Station

Mounting components of the docking station step-by-step

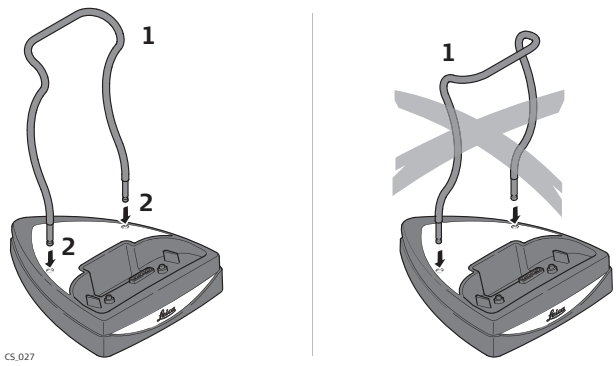

Step	Description
1.	Hold the docking station bracket as shown in the illustration in relation to the docking station rack.
2.	Slightly press the holder into the docking station rack. A click can be felt when the holder is secure.

4.1.11 Setting up as Handheld GNSS

☞ The setup GS05/CS10 is identical to the setup GS06/CS15. For simplicity, the setup GS05/CS10 is used in the following.

Attaching the GS05 to the CS10 step-by-step

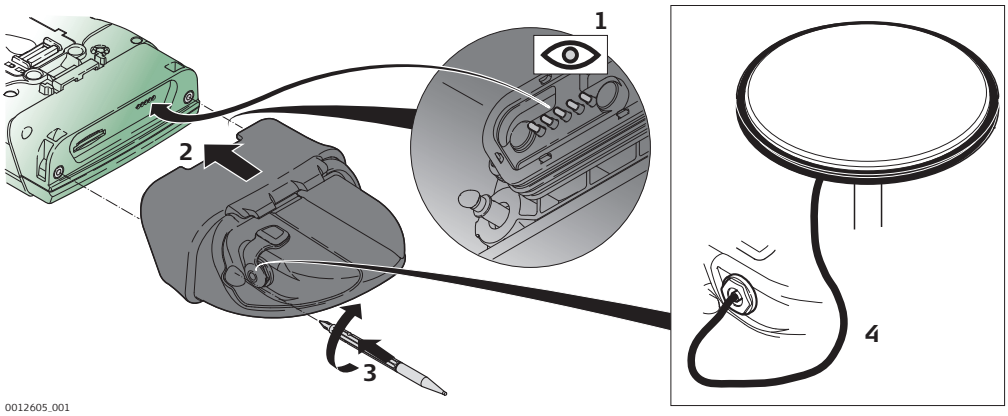

Step	Description
☞	Detach the slot cover from the CS10.
1.	Check the position of the contacts in the inner surface of the GS05.
2.	Attach the GS05 to the CS10.
3.	Press the screwdriver end of the supplied stylus on the quarter-turn screws and tighten them.
4.	To achieve the optimal satellite tracking performance, mount the AS05 (external GNSS antenna) on the GS05.

4.1.12 Setting up as Robotic

Attaching the CTR16/CTR17 to the CS15 step-by-step

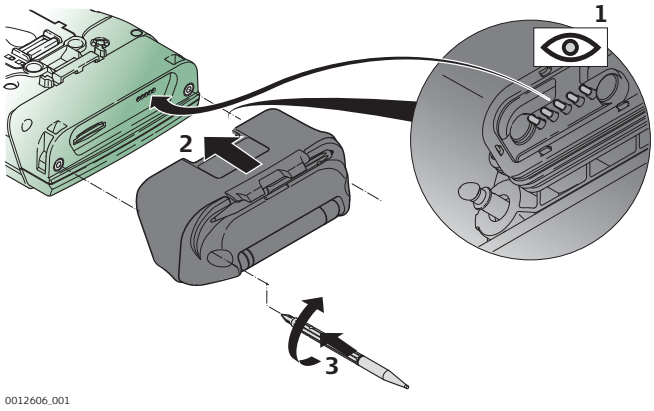

Step	Description
☞	Detach the slot cover from the CS15. Refer to "4.1.8 Fixing the Slot Cover to the CS".
1.	Check the position of the contacts in the inner surface of the CTR16/CTR17.
2.	Attach the CTR16/CTR17 to the CS15.
3.	Press the screwdriver end of the supplied stylus on the quarter-turn screws and tighten them.

4.1.13 Connecting to a Personal Computer

☞ Microsoft ActiveSync (for PCs with Windows XP operating system) or Windows Mobile Device Center (for PCs with Windows Vista or Windows 7/Windows 8 operating system) is the synchronisation software for Windows mobile-based pocket PCs. Microsoft ActiveSync or Windows Mobile Device Center enables a PC and a Windows mobile-based pocket PC to communicate.

Install Leica Viva USB drivers

Step	Description
1.	Start the PC.
2.	Insert the Leica Viva Series USB card.
3.	Run the **SetupViva&GR_USB_XX.exe** to install the drivers necessary for Leica Viva devices. Depending on the version (32bit or 64bit) of the operating system on your PC, you have to select between the three setup files following: • SetupViva&GR_USB_32bit.exe • SetupViva&GR_USB_64bit.exe • SetupViva&GR_USB_64bit_itanium.exe ☞ The setup has to be run only once for all Leica Viva devices.
4.	The **Welcome to InstallShield Wizard for Leica Viva & GR USB drivers** window appears. ☞ Ensure that all Leica Viva devices are disconnected from your PC before you continue!
5.	**Next>**.
6.	The **Ready to Install the Program** window appears.
7.	**Install**. The drivers will be installed on your PC. ☞ For PCs with Windows Vista or Windows 7/Windows 8 operating system: If not already installed, Windows Mobile Device Center will be installed additionally.
8.	The **InstallShield Wizard Completed** window appears.
9.	Check **I have read the instructions** and click **Finish** to exit the wizard.

Connect USB cable to PC for the first time step-by-step

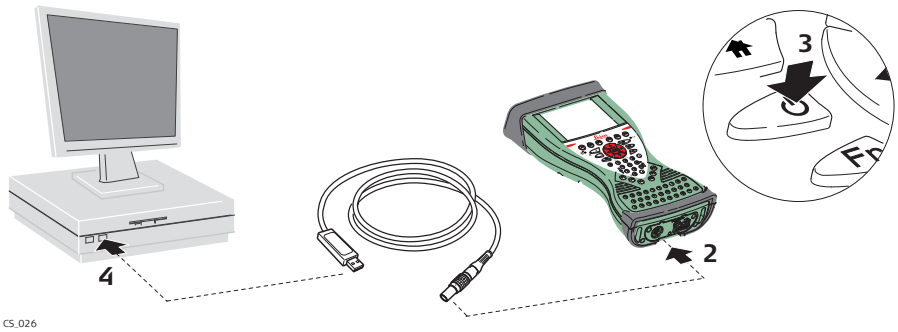

Step	Description
1.	Start the PC.
2.	Plug the GEV234 cable into CS field controller. ☞ For CS field controllers with DSUB9 connector, the GEV223 cable has to be used.
3.	Turn on the CS field controller.
4.	Plug the GEV234 cable into the USB port of the PC. The **Found New Hardware Wizard** starts up automatically.

Step	Description
5.	Check **Yes, this time only**. **Next>**.
6.	Check **Install the software automatically (Recommended)**. **Next>**. The software for **Remote NDIS based LGS CS Device** will be installed on your PC.
7.	**Finish**.
8.	The **Found New Hardware Wizard** starts up automatically a second time.
9.	Check **Yes, this time only**. **Next>**.
10.	Check **Install the software automatically (Recommended)**. **Next>**. The software for **LGS CS USB Device** will be installed on your PC.
11.	**Finish**.
	For PCs with Windows XP operating system:
12.	Run the ActiveSync installation program if not already installed.
13.	Allow USB connections inside the **Connection Settings** window of ActiveSync.
	For PCs with Windows Vista or Windows 7/Windows 8 operating system:
14.	Windows Mobile Device Center starts up automatically. If does not start automatically, start Windows Mobile Device Center.

Connect to PC via USB cable step-by-step

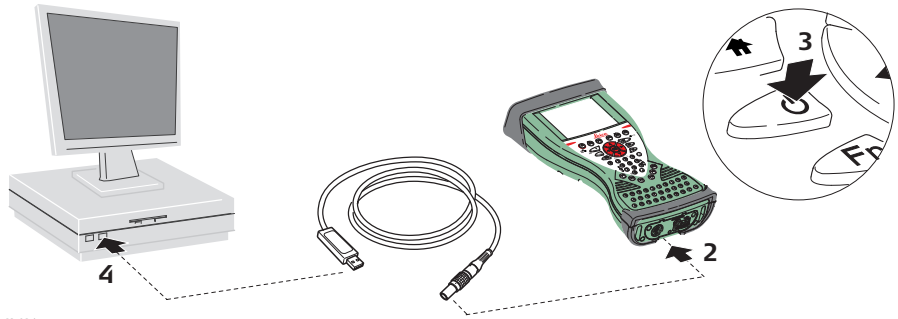

Step	Description
1.	Start the PC.
2.	Plug the GEV234 cable into CS field controller. ☞ For CS field controllers with DSUB9 connector, the GEV223 cable has to be used.
3.	Turn the CS field controller on.
4.	Plug the GEV234 cable into the USB port of the PC.
	For PCs with Windows XP operating system:
	☞ ActiveSync starts up automatically. If does not start automatically, start ActiveSync. If not already installed, run the ActiveSync installation program.
5.	Allow USB connections inside the **Connection Settings** window of ActiveSync.
6.	Click **Explore** in ActiveySync.
	☞ The folders on the CS field controller are displayed under **Mobile Devices**. The folders of the data storage device can be found in **StorageCard**.
	For PCs with Windows Vista or Windows 7/Windows 8 operating system:
	☞ Windows Mobile Device Center starts up automatically. If does not start automatically, start Windows Mobile Device Center.

4.1.14 Enabling WiFi in WinCE

Enabling WiFi in WinCE step-by-step

☞ WiFi is only available for certain models.

Step	Description
1.	Press Fn **Minim** to minimise SmartWorx.
2.	Select **Start\Settings\Network and Dial-Up Connections**.
3.	In the **Network Connections** window: Tab the **NXPWLAN1**/**OWL221A1** icon and select **File\Enable**. OR Hold the stylus on the **NXPWLAN1**/**OWL221A1** icon. Select **Enable** from the context menu.

4.2 Power Functions

Turning CS field controller on

Press and hold power key (⏻) for 2 s.

☞ CS field controller must have a power supply.

Turning CS field controller off

Press and hold power key (⏻) for 5 s.

☞ CS field controller must be on.

Putting CS field controller into stand-by

Press and hold power key (⏻) < 2 s.

☞ CS field controller must be on. The software must be in the Main Menu.

Power Options menu

Press and hold power key (⏻) for 2 s to open **Power Options** menu.

☞ CS field controller must be on.

Option	Description
Turn off	Turn CS field controller off.
Stand-by	Put CS field controller into stand-by mode. ☞ In stand-by mode, CS field controller shuts down and reduces power consumption. Rebooting from stand-by mode is quicker than a cold start after turning off.
Lock keyboard	Lock the keyboard. Option turns to **Unlock keyboard**.
Turn off touch screen	Disable touch screen. Option turns to **Turn on touch screen**.
Reset...	Perform one of the following options: • **Restart** (restarts Windows CE) • **Reset Windows CE** (resets Windows CE and communication settings to factory defaults) • **Reset installed software** (resets settings of all installed software) • **Reset Windows CE and installed software** (resets Windows CE and settings of all installed software)

Turn on GS08plus/GS12

To turn on the instrument press and hold the ON/OFF button for 2 s.

Turn off GS08plus/GS12

To turn off the instrument press and hold the ON/OFF button for 2 s.

4.3 Batteries

4.3.1 Operating Principles

First-time Use/ Charging Batteries

- The battery must be charged before using it for the first time because it is delivered with an energy content as low as possible.
- The permissible temperature range for charging is between 0 °C and +40 °C/+32 °F and +104 °F. For optimal charging, we recommend charging the batteries at a low ambient temperature of +10 °C to +20 °C/+50 °F to +68 °F if possible.
- It is normal for the battery to become warm during charging. Using the chargers recommended by Leica Geosystems, it is not possible to charge the battery once the temperature is too high.
- For new batteries or batteries that have been stored for a long time (› three months), it is effectual to make only one charge/discharge cycle.
- For Li-Ion batteries, a single discharging and charging cycle is sufficient. We recommend carrying out the process when the battery capacity indicated on the charger or on a Leica Geosystems product deviates significantly from the actual battery capacity available.

Operation / Discharging

- The batteries can be operated from • 20 °C to +55 °C/• 4 °F to +131 °F.
- Low operating temperatures reduce the capacity that can be drawn; high operating temperatures reduce the service life of the battery.

4.3.2 Changing the Battery

Insert and remove the battery on the CS field controller step-by-step

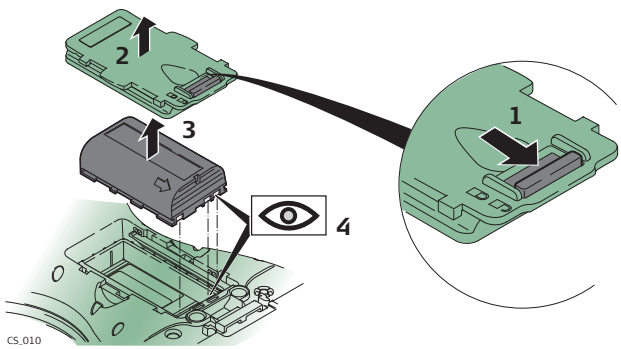

Step	Description
☞	Turn CS field controller over to gain access to the battery compartment.
1.	Push the slide fastener in the direction of the arrow with the open-lock symbol.
2.	Open the battery compartment. ☞ Ensure that no water enters the battery compartment. IP67 applies only with the battery compartment closed.
3.	Pull the battery from the battery compartment.
4.	Place the battery into the battery compartment with the Leica logo facing to the top.
5.	Close the battery compartment by pushing the slide fastener in the direction of the arrow with the close-lock symbol.

Insert and remove the battery on the GS08plus/GS12 step-by-step

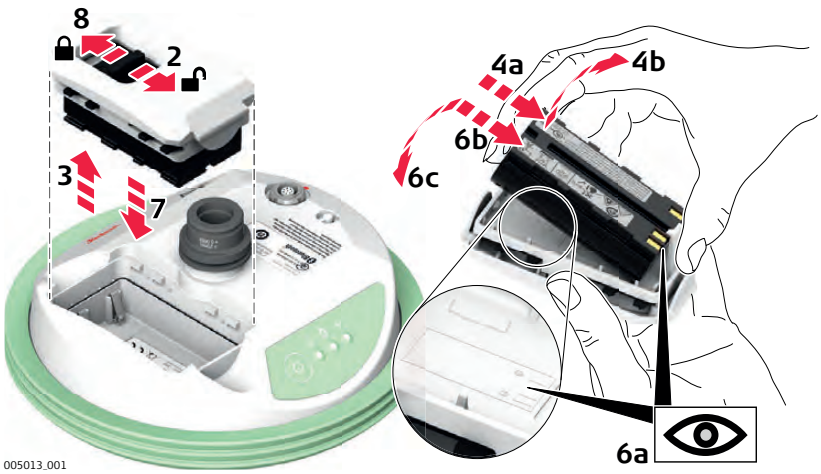

Step	Description
1.	Turn GS08plus/GS12 over to gain access to the battery compartment.
2.	Open the battery compartment by pushing the slide fastener in the direction of the arrow with the open-lock symbol.
3.	Pull out the battery housing. The battery is attached to the housing.
4.	Hold the battery housing and pull the battery from the battery housing.
5.	A polarity of the battery is displayed inside the battery housing. This is a visual aid to assist in placing the battery correctly.
6.	Place the battery onto the battery housing, ensuring that the contacts are facing outward. Click the battery into position.
7.	Close the battery compartment by pushing the slide fastener in the direction of the arrow with the close-lock symbol.

4.3.3 Charging the Battery

Charge battery step-by-step

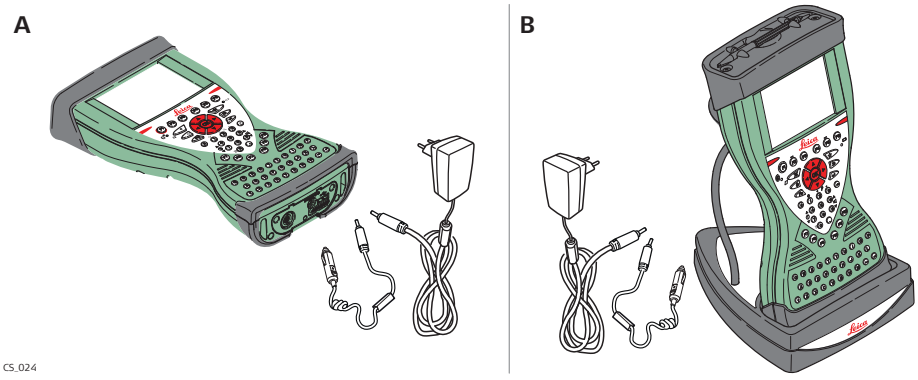

Step	Description
1.	Connect the GEV235 power adapter or GDC221 car adapter with the CS field controller (A) or the docking station (B) and an A/C plug.
2.	The power LED on the CS field controller switches on. When CS field controller's battery is fully charged the LED switches off again. ☞ Refer to "LED indicators" for information about the power LED.

Charge battery for GS08plus/GS12

To charge the batteries for GS08plus/GS12, use the Leica Geosystems chargers GKL311 or GKL341. Refer to the GKL311 or GKL341 User Manual for further information.

- Keep the card dry.
- Use it only within the specified temperature range.
- Do not bend the card.
- Protect the card from direct impacts.

Failure to follow these instructions could result in data loss and/or permanent damage to the card.

Insert and remove an SD card step-by-step

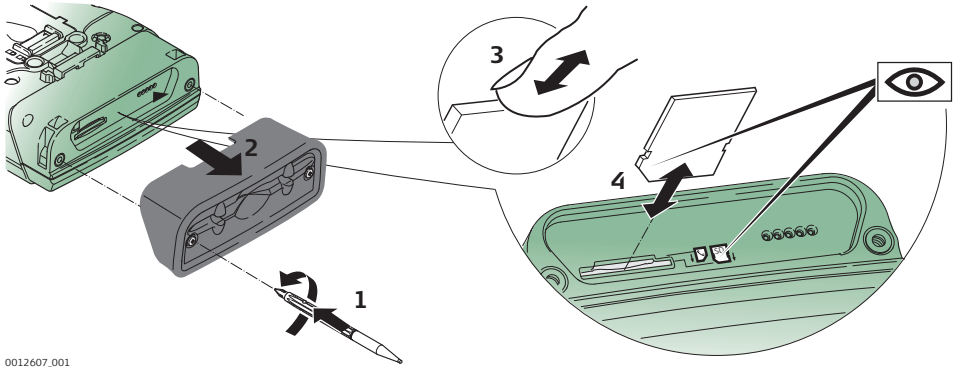

Step	Description
	The SD card is inserted into a slot inside the top of the CS10/CS15.
1.	Loosen the screws inside the slot cover on top of the CS10/CS15 using the screwdriver end of the stylus.
2.	Detach the slot cover from the CS10/CS15.
3.	Slide the card firmly into the slot until it clicks into position. Do not force the card into the slot.
4.	The card must be held with the contacts facing the slot.
5.	Attach the slot cover and tighten the screws.
6.	To remove the card, detach the slot cover of the CS10/CS15.
7.	Gently press the top of the card to release it from the slot.
8.	Remove the SD card and attach the slot cover.

LED indicators

Description

The CS field controller has **L**ight **E**mitting **D**iode indicators. They indicate the basic field controller status.

Diagram

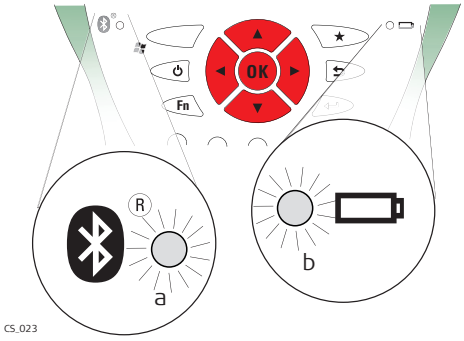

a) Bluetooth LED
b) Power LED

Description of the LEDs

IF the	is	THEN
Bluetooth LED	green	Bluetooth is in data mode and ready for connecting.
	purple	Bluetooth is connecting.
	blue	Bluetooth has connected.
	flashing blue	data is being transferred
Power LED	off	power is off.
	green	power is okay.
	flashing green	power is okay. The battery is being charged.
	yellow	power is low. The remaining time for which enough power is available depends on the use of wireless modules, the temperature and the age of the battery.
	flashing yellow	power is low. The remaining time for which enough power is available depends on the use of wireless modules, the temperature and the age of the battery. The battery is being charged.
	red	power is very low. The battery should be changed.
	flashing red	power is very low. The battery is being charged.

LED indicators

Description

The CTR16/CTR17 has a **L**ight **E**mitting **D**iode indicator. It indicates the basic radio status.

Diagram

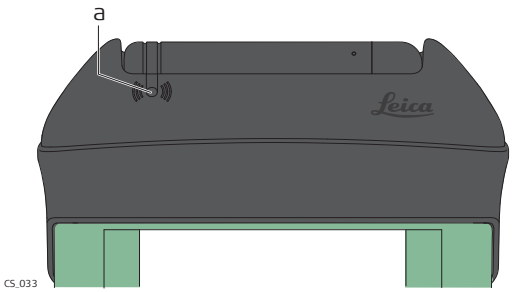

a) TPS radio LED

Description of the LEDs

IF the	is	THEN
TPS radio LED	green	radio is in data mode and ready for connecting.
	orange	the CTR16/CTR17 is in configuration mode
	purple	radio is connecting.
	blue	radio has connected.
	flashing blue	data is being transferred.
	red	the CTR16/CTR17 is not ready to be used.

LED indicators

Description

The GS08plus/GS12 instrument has **L**ight **E**mitting **D**iode indicators. They indicate the basic instrument status.

Diagram

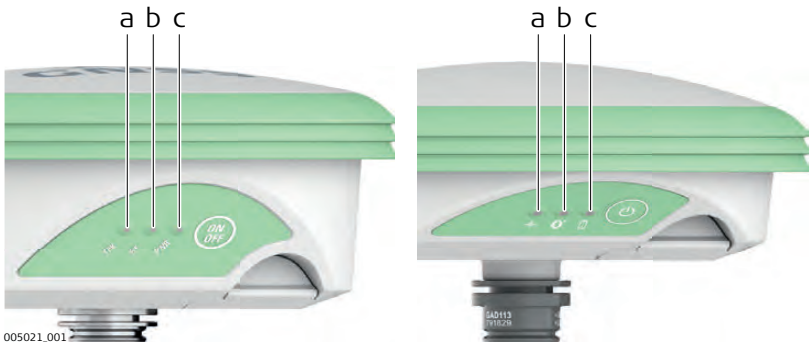

a) Tracking LED (TRK)
b) Bluetooth LED (BT)
c) Power LED (PWR)

Description of the LEDs

IF the	is	THEN
TRK LED	off	No satellites are tracked.
	flashing green	Less than four satellites are tracked, a position is not yet available.
	green	Enough satellites are tracked to compute a position.
	red	GS08plus/GS12 instrument is initialising.
BT LED	green	Bluetooth is in data mode and ready for connecting.
	purple	Bluetooth is connecting.
	blue	Bluetooth has connected.
	flashing blue	Data is being transferred.
GS12 PWR LED	off	Power is off.
	green	Power is okay.
	flashing green	Power is low. The remaining time for which enough power is available depends on the type of survey, the temperature and the age of the battery.
GS08plus PWR LED	off	Power is off.
	green	Power is 100% - 20%.
	red	Power is 20% - 5%.
	flashing red	Power is low (<5%). The remaining time for which enough power is available depends on the type of survey, the temperature and the age of the battery.

5 Care and Transport

5.1 Transport

Transport in a road vehicle

Never carry the product loose in a road vehicle, as it can be affected by shock and vibration. Always carry the product in its transport container, original packaging or equivalent and secure it.

Shipping

When transporting the product by rail, air or sea, always use the complete original Leica Geosystems packaging, transport container and cardboard box, or its equivalent, to protect against shock and vibration.

Shipping, transport of batteries

When transporting or shipping batteries, the person responsible for the product must ensure that the applicable national and international rules and regulations are observed. Before transportation or shipping, contact your local passenger or freight transport company.

5.2 Storage

Product

Respect the temperature limits when storing the equipment, particularly in summer if the equipment is inside a vehicle. Refer to "6 Technical Data" for information about temperature limits.

Li-Ion batteries

- Refer to "Technical Data" for information about storage temperature range.
- Remove batteries from the product and the charger before storing.
- After storage recharge batteries before using.
- Protect batteries from damp and wetness. Wet or damp batteries must be dried before storing or use.
- A storage temperature range of 0 °C to +30 °C / +32 °F to +86 °F in a dry environment is recommended to minimize self-discharging of the battery.
- At the recommended storage temperature range, batteries containing a 40% to 50% charge can be stored for up to one year. After this storage period the batteries must be recharged.

5.3 Cleaning and Drying

Product and accessories

- Use only a clean, soft, lint-free cloth for cleaning. If necessary, moisten the cloth with water or pure alcohol. Do not use other liquids; these may attack the polymer components.

Damp products

Dry the product, the transport container, the foam inserts and the accessories at a temperature not greater than 40°C/104°F and clean them. Remove the battery cover and dry the battery compartment. Do not repack until everything is dry. Always close the transport container when using in the field.

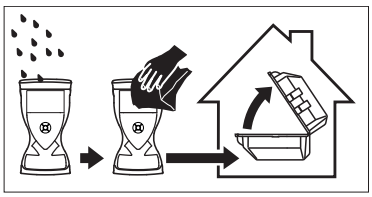

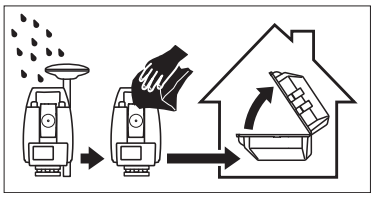

Cables and plugs

Keep plugs clean and dry. Blow away any dirt lodged in the plugs of the connecting cables.

Connectors with dust caps

Wet connectors must be dry before attaching the dust cap.

6 Technical Data

6.1 CS10/CS15 Technical Data

Design

Glass reinforced polymer housing with optional integrated battery and radio modem.

Control unit

CS10

Display:	VGA (480 x 640 pixels), graphics capable LCD, illumination, touch screen, colour
Keyboard:	26 keys
Touch screen:	Toughened film on glass
Sound:	Integrated sealed speaker and microphone

CS15

Display:	VGA (640 x 480 pixels), graphics capable LCD, illumination, touch screen, colour
Keyboard:	65 keys including 12 function keys
Touch screen:	Toughened film on glass
Sound:	Integrated sealed speaker and microphone

Dimensions

Type	Length [m]	Width [m]	Thickness [m]
CS10	0.200	0.102	0.045
CS15	0.245	0.125	0.045

Weight

Type	Weight [kg]
CS10, with battery	0.65
CS15, with battery	0.79

Recording

Data can be recorded on the SD card, USB stick or in the internal memory.

Power

Type	Consumption [W]	External supply voltage
CS10/CS15	2.0	Nominal voltage 12 V DC (⎓) Voltage range 10.5 V-28 V

Internal battery

Type	Battery	Voltage	Capacity	Operating time, typical*
CS10/CS15	Li-Ion	7.4 V	GEB212: 2.6 Ah	10 h

* Operating time depends on use of wireless communication devices.

Environmental specifications

Temperature

Type	Operating temperature [°C]	Storage temperature [°C]
CS10/CS15	-30 to +60	-40 to +80
Internal battery	-20 to +55	-40 to +70

Protection against water, dust and sand

Type	Protection
CS10/CS15	IP67 (IEC60529) Dust tight Waterproof to 1 m temporary immersion

Humidity

Type	Protection
CS10/CS15	Up to 100 % The effects of condensation are to be effectively counteracted by periodically drying out CS10/CS15.

Interfaces

Type	RS232	USB Host	USB OTG	Bluetooth	WLAN*
CS10/CS15	LEMO port or DSUB9	LEMO port or USB A	LEMO port, USB Mini-AB or docking station contacts	Class 2	802.11b/g

* WLAN is only available for certain models.

Data format for RS232

The default values are:

Baud rate:	115200
Parity:	None
Terminator:	CR/LF
Data bits:	8
Stop bits:	1

Ports

Type	8 pin LEMO-1	DSUB9	USB A Host	USB Mini	Docking station contacts
CS10/CS15	For power and/or communication	For communication			For power and/or communication

6.2 GS05/GS06 Technical Data

6.2.1 Tracking Characteristics

Instrument technology

SmartTrack

Satellite reception

Single frequency

Instrument channels

GS05/GS06: Up to 14 channels continuous tracking on L1 (GPS); up to 14 channels continuous tracking on L1 (GLONASS); one channel tracking SBAS.

☞ Depending on the satellite systems and signals configured, a maximum number of 14 channels is allocated.

Supported codes and phases

GPS

Type	L1
GS05/GS06	Carrier phase, C/A-code

GLONASS

Type	L1
GS05/GS06	Carrier phase, C/A-code

☞ Carrier phase and code measurements on L1 (GPS) are fully independent with AS on or off.

Satellites tracked

GS05/GS06: Up to 14 simultaneously on L1 (GPS) + up to 14 simultaneously on L1 (GLONASS) + up to one SBAS

6.2.2 Accuracy

☞ Accuracy is dependent upon various factors including the number of satellites tracked, constellation geometry, observation time, ephemeris accuracy, ionospheric disturbance, multipath and resolved ambiguities.

The following accuracies, given as **r**oot **m**ean **s**quare, are based on measurements processed using LGO and on real-time measurements.

The use of multiple GNSS systems can increase accuracy by up to 30% relative to GPS only.

Differential code

The baseline precision of a differential code solution for static and kinematic surveys is 40 cm. The measurement of accuracy is compliant with ISO 17123-8.

Differential phase in post-processing

Type	Horizontal	Vertical
Static	5 mm + 0.5 ppm	10 mm + 0.5 ppm
Kinematic	10 mm + 1 ppm	20 mm + 1 ppm

6.2.3 Technical Data

Description and use

The table gives a description and the intended use of the GS05/GS06.

Type	Description	Use
GS05	L1 GPS, GLONASS SmartTrack antenna.	With CS10 field controller.
GS06	L1 GPS, GLONASS SmartTrack antenna.	With CS15 field controller.

Dimensions

Type	Length [m]	Width [m]	Thickness [m]
GS05 with CS10	0.278	0.102	0.045
GS06 with CS15	0.323	0.125	0.045

Connector

5 pin interface port

Weight

Type	Weight [kg]/[lbs]
GS05 with CS10	0.750/1.653
GS06 with CS15	0.910/2.006

Power

Power consumption: 0.5 W typically, 45 mA
External supply voltage: Nominal 12 V DC (⎓), voltage range 5 V-28 V DC

Electrical data

Type	GS05/GS06
Voltage	-
Current	-
Frequency	GPS L1 1575.42 MHz GLONASS L1 1602.5625 MHz-1611.5 MHz
Gain	Typically 27 dBi
Noise Figure	Typically < 2 dBi

Environmental specifications

Temperature

Operating temperature [°C]	Storage temperature [°C]
-30 to +60	-40 to +80

Protection against water, dust and sand

Protection
IP67 (IEC 60529) Dust tight Protected against water jets Waterproof to 1 m temporary immersion

Humidity

Protection
Up to 100 % The effects of condensation are to be effectively counteracted by periodically drying out the antenna.

6.3 CTR16/CTR17 Technical Data

Description and use

The CTR16/CTR17 is a high performance wireless data transfer device operating in the 2.4 GHz frequency band. The CTR16/CTR17 can be used on CS15 controller only for communication to a total station with RH16/RH17 or TCPS29/30 attached.

Dimensions

Type	Length [m]	Width [m]	Thickness [m]
CTR16/CTR17	0.131	0.069	0.053

Connector

5 pin interface port

Weight

0.155 kg / 0.342 lbs

Power

Type	CTR16/CTR17
Power consumption	100 mA nominal (5 V), 200 mA max.
Power supply	From instrument

Environmental specifications

Temperature

Operating temperature [°C]	Storage temperature [°C]
-30 to +60	-40 to +80

Protection against water, dust and sand

Protection
IP67 (IEC 60529) Dust tight Protected against water jets Waterproof to 1 m temporary immersion

Humidity

Protection
Up to 100 % The effects of condensation are to be effectively counteracted by periodically drying out the CTR16/CTR17.

6.4 GS08plus/GS12

6.4.1 Tracking Characteristics

Instrument technology

SmartTrack

Satellite reception

GS08plus: Dual frequency.
GS12: Triple frequency.

Instrument channels

☞ Depending on the satellite systems and signals configured, a maximum number of 120 channels is allocated.

Supported codes and phases

GPS

Type	L1	L2	L5
GS08plus	Carrier phase, C/A-code	Carrier phase, C code (L2C) and P2-code	-
GS12	Carrier phase, C/A-code	Carrier phase, C code (L2C) and P2-code	Carrier phase, code

GLONASS

Type	L1	L2
GS08plus	Carrier phase, C/A-code	Carrier phase, P2-code
GS12	Carrier phase, C/A-code	Carrier phase, P2-code

Galileo

Type	E1	E5a	E5b	Alt-BOC
GS12	Carrier phase, code	Carrier phase, code	Carrier phase, code	Carrier phase, code

☞ Carrier phase and code measurements on L1, L2 and L5 (GPS) are fully independent with AS on or off.

Satellites tracked

GS08plus: Up to 16 simultaneously on L1, L2 (GPS) + up to 14 simultaneously on L1 and L2 (GLONASS)+ up to four SBAS (EGNOS, WAAS, MSAS, GAGAN)

GS12: Up to 16 simultaneously on L1, L2 and L5 (GPS) + up to 14 simultaneously on L1 and L2 (GLONASS) + up to 14 simultaneously on E1, E5a, E5b and Alt-BOC (Galileo) + up to four SBAS (EGNOS, WAAS, MSAS, GAGAN)

6.4.2 Accuracy

Accuracy is dependent upon various factors including the number of satellites tracked, constellation geometry, observation time, ephemeris accuracy, ionospheric disturbance, multipath and resolved ambiguities.

The following accuracies, given as **r**oot **m**ean **s**quare, are based on measurements processed using LGO and on real-time measurements.

The use of multiple GNSS systems can increase accuracy by up to 30% relative to GPS only.

Differential code

The baseline precision of a differential code solution for static and kinematic surveys is 25 cm.

The measurement of accuracy is compliant with ISO 17123-8.

Differential phase in post-processing

Type		Horizontal	Vertical
Static and rapid static		3 mm + 0.5 ppm	5 mm + 0.5 ppm
Kinematic	GS08plus	10 mm + 1 ppm	20 mm + 1 ppm
	GS12	8 mm + 1 ppm	15 mm + 1 ppm
Static with long observations	GS08plus	3 mm + 0.5 ppm	6 mm + 0.5 ppm
	GS12	3 mm + 0.1 ppm	3.5 mm + 0.4 ppm

Differential phase in real-time

Type	Horizontal	Vertical
Single Baseline (<30 km)	8 mm + 1 ppm	15 mm + 1 ppm
Network RTK	8 mm + 0.5 ppm	15 mm + 0.5 ppm

6.4.3 Technical Data

Description and use

The table gives a description and the intended use of the GS08plus/GS12.

Type	Description	Use
GS08plus	L1, L2 GPS, GLONASS SmartTrack antenna	With CS10 or CS15 field controller
GS12	L1, L2, L5 GPS, GLONASS, Galileo SmartTrack antenna	With CS10 or CS15 field controller

Dimensions

Type	Height	Diameter
GS08plus	0.071 m	0.186 m
GS12	0.089 m	0.186 m

Connector

- 8 pin LEMO-1
- 5 pin SmartStation clip-on-contacts (GS12 only)

Mounting

5/8" Whitworth

Weight

GS08plus	0.8 kg including internal battery
GS12	1.1 kg including internal battery

Power

Power consumption:	2.0 W typically
External supply voltage:	Nominal 12 V DC (⎓), voltage range 10.5 V-28 V

Battery internal

Type:	Li-Ion
Voltage:	7.4 V
Capacity:	GEB211: 2.2 Ah GEB212: 2.6 Ah
Typical operating time:	7 h The given operating times are valid for • one fully charged GEB212 battery. • 25°C. Operating times will be shorter when working in cold weather.

Electrical data

Type	GS08plus	GS12
Frequency		
GPS L1 1575.42 MHz	✓	✓
GPS L2 1227.60 MHz	✓	✓
GPS L5 1176.45 MHz	-	✓
GLONASS L1 1602.5625-1611.5 MHz	✓	✓
GLONASS L2 1246.4375-1254.3 MHz	✓	✓
Galileo E1 1575.42 MHz	-	✓
Galileo E5a 1176.45 MHz	-	✓
Galileo E5b 1207.14 MHz	-	✓
Galileo Alt-BOC 1191.795 MHz	-	✓
Gain	Typically 37 dBi	Typically 27 dBi
Noise Figure	Typically < 3 dBi	Typically < 2 dBi

Environmental specifications

Temperature

Operating temperature [°C]	Storage temperature [°C]
-40 to +65 Bluetooth: -30 to +65	-40 to +80

Protection against water, dust and sand

Protection
IP68 (IEC 60529) Dusttight Protected against water jets Protected against continuous immersion in water Tested for 2 h in 1.40 m depth

Humidity

Protection
Up to 100 % The effects of condensation are to be effectively counteracted by periodically drying out the antenna.

6.5 Antennas Technical Data

Description and use

The table gives a description and the intended use of the antenna.

Type	Description	Use
AS05	L1 GPS, GLONASS SmartTrack+ antenna with built-in ground plane	With CS10/GS05, CS15/GS06

Dimensions

Type	AS05
Height	6.2 cm
Diameter	17.0 cm

Connector

AS05: TNC female

Mounting

AS05: 5/8" Whitworth

Weight

AS05: 0.4 kg

Electrical data

Type	AS05
Voltage	4.5 V to 18 V DC
Current	35 mA typical
Frequency	GPS L1 1575.42 MHz GLONASS L1 1602.5625 MHz-1611.5 MHz
Gain (typically)	27 dBi
Noise Figure (typically)	< 2 dBi

Environmental specifications

Temperature

Type	Operating temperature [°C]	Storage temperature [°C]
AS05	-40 to +70	-55 to +85

Protection against water, dust and sand

Type	Protection
AS05	IP68 (IEC 60529) Dust tight Protected against water jets Protected against continuous immersion in water Tested for 2 h in 1.40 m depth

Humidity

Type	Protection
AS05	Up to 100 % The effects of condensation are to be effectively counteracted by periodically drying out the antenna.

Cable length

Separation distance from instrument	to antenna	Supplied cable lengths [m]
GS05/GS06	AS05	1.2

6.6 Conformity to National Regulations

Conformity to national regulations

For products which do not fall under R&TTE directive:

Hereby, Leica Geosystems AG, declares that the product/s is/are in compliance with the essential requirements and other relevant provisions of the applicable European Directives. The declaration of conformity can be consulted at http://www.leica-geosystems.com/ce.

6.6.1 CS10

Conformity to national regulations

- Hereby, Leica Geosystems AG, declares that the product CS10 is in compliance with the essential requirements and other relevant provisions of Directive 1999/5/EC and other applicable European Directives. The declaration of conformity can be consulted at http://www.leica-geosystems.com/ce.

  Class 1 equipment according European Directive 1999/5/EC (R&TTE) can be placed on the market and be put into service without restrictions in any EEA member state.
- The conformity for countries with other national regulations not covered by the European directive 1999/5/EC has to be approved prior to use and operation.
- Japanese Radio Law and Japanese Telecommunications Business Law Compliance.
  - This device is granted pursuant to the Japanese Radio Law (電波法) and the Japanese Telecommunications Business Law (電気通信事業法).
  - This device should not be modified (otherwise the granted designation number will become invalid).

Frequency band

Type	Frequency band [MHz]
CS10, Bluetooth	2402 - 2480
CS10, 3.5G GSM/UMTS	UMTS/HSDPA (WCDMA/FDD) 850 / 1900 / 2100 Quad-Band EGSM 850 / 900 / 1800 / 1900 GPRS multi-slot class 12 EDGE multi-slot class 12

Output power

Type	Output power [mW]
CS10, Bluetooth	2.5
CS10, 3.5G GSM/UMTS EGSM850/900	2
CS10, 3.5G GSM/UMTS GSM1800/1900	1
CS10, 3.5G GSM/UMTS UMTS2100	0.25
CS10, 3.5G GSM/UMTS EDGE850/900	0.5
CS10, 3.5G GSM/UMTS EDGE1800/1900	0.4

Antenna

Type	Antenna	Gain [dBi]	Connector	Frequency band [MHz]
CS10, Bluetooth	Integrated antenna	-	-	-
CS10, 3.5G GSM/UMTS	Integrated antenna	-	-	-
GS05	Internal GNSS antenna element (receive only)	-	-	-

6.6.2 CS15

Conformity to national regulations

- FCC Part 15, 22 and 24 (applicable in US)
- Hereby, Leica Geosystems AG, declares that the product CS15 is in compliance with the essential requirements and other relevant provisions of Directive 1999/5/EC and other applicable European Directives. The declaration of conformity can be consulted at http://www.leica-geosystems.com/ce.

  Class 1 equipment according European Directive 1999/5/EC (R&TTE) can be placed on the market and be put into service without restrictions in any EEA member state.
- The conformity for countries with other national regulations not covered by the FCC part 15, 22 and 24 or European directive 1999/5/EC has to be approved prior to use and operation.
- Japanese Radio Law and Japanese Telecommunications Business Law Compliance.
  - This device is granted pursuant to the Japanese Radio Law (電波法) and the Japanese Telecommunications Business Law (電気通信事業法).
  - This device should not be modified (otherwise the granted designation number will become invalid).

Frequency band

Type	Frequency band [MHz]
CS15, Bluetooth	2402 - 2480
CS15, 3.5G GSM/UMTS	UMTS/HSDPA (WCDMA/FDD) 850 / 1900 / 2100 Quad-Band EGSM 850 / 900 / 1800 / 1900 GPRS multi-slot class 12 EDGE multi-slot class 12
CS15, WLAN (certain countries only)	2400 - 2484

Output power

Type	Output power [mW]
CS15, Bluetooth	2.5
CS15, 3.5G GSM/UMTS EGSM850/900	2
CS15, 3.5G GSM/UMTS GSM1800/1900	1
CS15, 3.5G GSM/UMTS UMTS2100	0.25
CS15, 3.5G GSM/UMTS EDGE850/900	0.5
CS15, 3.5G GSM/UMTS EDGE1800/1900	0.4
CS15, WLAN (802.11b) (certain countries only)	50
CS15, WLAN (802.11g) 6 Mbit/s-36 Mbit/s (certain countries only)	50
CS15, WLAN (802.11b) 48 Mbit/s-56 Mbit/s (certain countries only)	31.6

Antenna

Type	Antenna	Gain [dBi]	Connector	Frequency band [MHz]
CS15, Bluetooth	Integrated antenna	-	-	-
CS15, 3.5G GSM/UMTS	Integrated antenna	-	-	-
CS15, WLAN (certain countries only)	Integrated antenna	-	-	-
GS06	Internal GNSS antenna element (receive only)	-	-	-

6.6.3 CTR16/CTR17

Conformity to national regulations for CTR16

- FCC Part 15 (applicable in US)
- The conformity for countries with other national regulations not covered by the FCC part 15 has to be approved prior to use and operation.
- Japanese Radio Law and Japanese Telecommunications Business Law Compliance.
  - This device is granted pursuant to the Japanese Radio Law (電波法) and the Japanese Telecommunications Business Law (電気通信事業法).
  - This device should not be modified (otherwise the granted designation number will become invalid).

Conformity to national regulations

- FCC Part 15 (applicable in US)
- Hereby, Leica Geosystems AG, declares that the product CTR17 is in compliance with the essential requirements and other relevant provisions of Directive 1999/5/EC and other applicable European Directives. The declaration of conformity can be consulted at http://www.leica-geosystems.com/ce.

  Class 1 equipment according European Directive 1999/5/EC (R&TTE) can be placed on the market and be put into service without restrictions in any EEA member state.
- The conformity for countries with other national regulations not covered by the FCC part 15 or European directive 1999/5/EC has to be approved prior to use and operation.
- Japanese Radio Law and Japanese Telecommunications Business Law Compliance.
  - This device is granted pursuant to the Japanese Radio Law (電波法) and the Japanese Telecommunications Business Law (電気通信事業法).
  - This device should not be modified (otherwise the granted designation number will become invalid).

Frequency band

CTR16/CTR17:	2402 - 2480 MHz

Output power

< 100 mW (e. i. r. p.)

Antenna

Type:	λ/2 antenna
Gain:	2 dBi maximal
Connector:	None (internal)

6.6.4 GS08plus

Conformity to national regulations

- FCC Part 15 (applicable in US)
- Hereby, Leica Geosystems AG, declares that the product GS08plus is in compliance with the essential requirements and other relevant provisions of Directive 1999/5/EC and other applicable European Directives. The declaration of conformity can be consulted at http://www.leica-geosystems.com/ce.

  Class 1 equipment according European Directive 1999/5/EC (R&TTE) can be placed on the market and be put into service without restrictions in any EEA member state.
- The conformity for countries with other national regulations not covered by the FCC part 15 or European directive 1999/5/EC has to be approved prior to use and operation.
- Japanese Radio Law and Japanese Telecommunications Business Law Compliance.
  - This device is granted pursuant to the Japanese Radio Law (電波法) and the Japanese Telecommunications Business Law (電気通信事業法).
  - This device should not be modified (otherwise the granted designation number will become invalid).

Frequency band

Type	Frequency band [MHz]
GS08plus	1227.60 1575.42 1246.4375 - 1254.3 1602.4375 - 1611.5
Bluetooth	2402 - 2480

Output power

Type	Output power [mW]
GNSS	Receive only
Bluetooth	5 (Class 1)

Antenna

GNSS	Internal GNSS antenna element (receive only)
Bluetooth	Type: Internal Microstrip antenna Gain: 1.0 dBi

6.6.5 GS12

Conformity to national regulations

- FCC Part 15 (applicable in US)
- Hereby, Leica Geosystems AG, declares that the product GS12 is in compliance with the essential requirements and other relevant provisions of Directive 1999/5/EC. The declaration of conformity can be consulted at http://www.leica-geosystems.com/ce.

  Class 1 equipment according European Directive 1999/5/EC (R&TTE) can be placed on the market and be put into service without restrictions in any EEA member state.
- The conformity for countries with other national regulations not covered by the FCC part 15 or European directive 1999/5/EC has to be approved prior to use and operation.
- Japanese Radio Law and Japanese Telecommunications Business Law Compliance.
  - This device is granted pursuant to the Japanese Radio Law (電波法) and the Japanese Telecommunications Business Law (電気通信事業法).
  - This device should not be modified (otherwise the granted designation number will become invalid).

Frequency band

Type	Frequency band [MHz]
GS12	1176.45 1191.795 1207.14 1227.60 1246.4375 - 1254.3 1575.42 1602.4375 - 1611.5
Bluetooth	2402 - 2480

Output power

Type	Output power [mW]
GNSS	Receive only
Bluetooth	5 (Class 1)

Antenna

GNSS	Internal GNSS antenna element (receive only)
Bluetooth	Type: Internal Microstrip antenna Gain: 1.5 dBi

7 Software Licence Agreement

Software Licence Agreement

This product contains software that is preinstalled on the product, or that is supplied to you on a data carrier medium, or that can be downloaded by you online according to prior authorisation from Leica Geosystems. Such software is protected by copyright and other laws and its use is defined and regulated by the Leica Geosystems Software Licence Agreement, which covers aspects such as, but not limited to, Scope of the Licence, Warranty, Intellectual Property Rights, Limitation of Liability, Exclusion of other Assurances, Governing Law and Place of Jurisdiction. Please make sure, that at any time you fully comply with the terms and conditions of the Leica Geosystems Software Licence Agreement.

Such agreement is provided together with all products and can also be referred to and downloaded at the Leica Geosystems home page at
http://leica-geosystems.com/about-us/compliance-standards/legal-documents
or collected from your Leica Geosystems distributor.

You must not install or use the software unless you have read and accepted the terms and conditions of the Leica Geosystems Software Licence Agreement. Installation or use of the software or any part thereof, is deemed to be an acceptance of all the terms and conditions of such Licence Agreement. If you do not agree to all or some of the terms of such Licence Agreement, you must not download, install or use the software and you must return the unused software together with its accompanying documentation and the purchase receipt to the distributor from whom you purchased the product within ten (10) days of purchase to obtain a full refund of the purchase price.

Open Source Information

The software on the product may contain copyright-protected software that is licensed under various open source licences.
Copies of the corresponding licences

- are provided together with the product (for example in the About panel of the software)
- can be downloaded on http://opensource.leica-geosystems.com

If foreseen in the corresponding open source licence, you may obtain the corresponding source code and other related data on
http://opensource.leica-geosystems.com.
Contact opensource@leica-geosystems.com in case you need additional information.

Appendix A Pin Assignments and Sockets

A.1 CS10/CS15

Description

Some applications require knowledge of the pin assignments for the instrument ports. In this chapter, the pin assignments and sockets for the instrument ports are explained.

Ports at the instrument bottom panel - DSUB9 connector

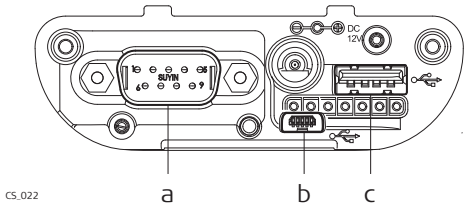

a) DSUB9 port
b) USB Mini port
c) USB A Host port

Ports at the instrument bottom panel - Lemo connector

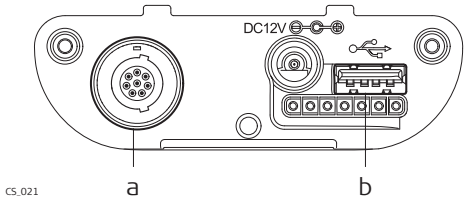

a) Lemo port (USB and serial)
b) USB A Host port

Pin assignments for RS232 serial port

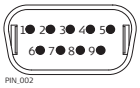

Pin	Signal Name	Function	Direction
1	NC	Not connected	-
2	RxD	RS232, receive data	In
3	TxD	RS232, transmit data	Out
4	NC	Not connected	-
5	GND	Signal Ground	-
6	NC	Not connected	-
7	RTS	RS232, request to send	Out
8	CTS	RS232, clear to send	In
9	NC	Not connected	-

Pin assignments for 8 pin LEMO-1

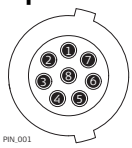

Pin	Signal Name	Function	Direction
1	USB_D+	USB data line	In or out
2	USB_D-	USB data line	In or out
3	GND	Signal ground	-
4	RxD	RS232, receive data	In
5	TxD	RS232, transmit data	Out
6	ID	Identification pin	In or out
7	PWR	Power input, 10.5 V-28 V	In
8	TRM_ON/USB_ID	RS232, general purpose signal	In or out

Sockets

9 pin RS232:	RS232, 9 pin, DB9
8 pin LEMO-1:	LEMO-1, 8 pin, LEMO EGI.1B.308.CLN

A.2 GS08plus

Description

Some applications require knowledge of the pin assignments for the instrument ports. In this chapter, the pin assignments and sockets for the instrument ports are explained.

Ports at the instrument underside

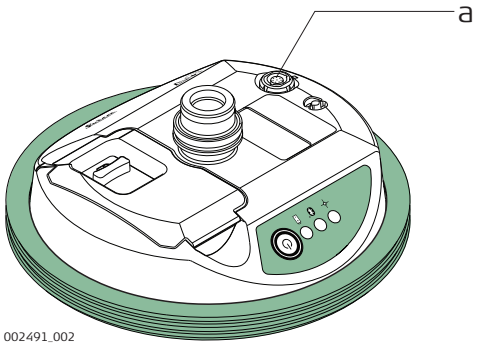

a) Lemo port (USB and serial)

Pin assignments for 8 pin LEMO-1

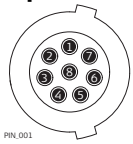

Pin	Signal Name	Function	Direction
1	USB_D+	USB data line	In or out
2	USB_D-	USB data line	In or out
3	GND	Signal ground	-
4	RxD	RS232, receive data	In
5	TxD	RS232, transmit data	Out
6	ID	Identification pin	In or out
7	PWR	Power input, 10.5 V-28 V	In
8	TRM_ON/USB_ID	RS232, general purpose signal	In or out

772386-8.0.0en
Original text
Printed in Switzerland
© 2016 Leica Geosystems AG, Heerbrugg, Switzerland

Leica Geosystems AG
Heinrich-Wild-Strasse
CH-9435 Heerbrugg
Switzerland
Phone +41 71 727 31 31
www.leica-geosystems.com

- when it has to be **right**